Manualslib.com - The Global Manuals Library

BUCHI PURE C-810 OPERATION MANUAL

Quick Links

Regular Maintenance Work

Table of Contents

Table of Contents
Warning notices in this document
Symbols
Warning symbols
Mark-ups and symbols
Trademarks
Connected devices
Proper use
Use other than intended
Staff qualification
Location of warning signs on the product
Residual risks
Faults during operation
Malware infection due to connections with other devices or network
Damage to the internal memory due to incorrect shutting down of the instrument
Personal protective equipment
Modifications
Description of function
Configuration
Front view Pure C-830 / C-835 / C-850
Rear view
Connections on gradient valve
Type plate

Scope of delivery
Technical data
Pure Chromatography Instruments
Ambient conditions
Material
Transport
Storage
Lifting the instrument
Before installation
Installation site
Securing against earthquakes
Establishing electrical connections
Establishing solvent connection
Installing the solvent level sensor
Assigning solvent to solvent lines
Calibrating the solvent level sensor
Installing the exhaust (ELSD only)
Assembling the waste bottle
Installing the waste level sensor
Calibrating the waste level sensor
Assembling the dry air supply (option)
Assembling the gas connection (option)
Assembling the solvent bottle platform (option)
Assembling the sample loop (Prep instruments only)
Control panel
Layout of control panel

Enter value
Menu bar
Conditions panel
Collection panel
Gradient panel
Run panel
Solvent selection panel
Detector selection panel
6.1.10 Slope detection panel
Editing a method
Selecting a cartridge (Flash mode)
Selecting a column (Prep mode)
Selecting a solvent
Editing the gradient
Editing detector selection
Editing the wavelength for the UV detector
Editing the fraction collection criteria
Editing the fraction collection time
Editing the vapor sensor sensitivity
6.2.10 Saving a method
Editing a solvent
Adding a new solvent
Deleting a solvent
Tasks during a separation
Introducing a sample into the prep system
Injecting a sample into the flash system
Installing and removing a cartridge
Installing and removing a column

Inserting the fraction collection tray
Selecting an existing method
Selecting values on the dialog box Sample Loading
Performing a Flash separation using a method
Preparing the instrument
Selecting the flash mode (Pure C-850 only)
Starting Flash separation using a method
Changings during a separation
Ending a Flash separation
Shutting down the instrument
Performing a Flash separation manually
Preparing the instrument
Selecting the flash mode (Pure C-850 only)
Starting Flash separation manually
Ending a Flash separation
Shutting down the instrument
Performing a Prep separation using a method
Preparing the instrument
Selecting the prep mode (Pure C-850 only)
Starting a Prep separation using a method
Changings during a separation
Ending a Prep separation
Shutting down the instrument
Performing a Prep separation manually
Preparing the instrument
Selecting the prep mode (Pure C-850 only)
Starting a separation
Changings during a separation

Ending a Prep separation
Shutting down the instrument
Identifying fractions
Identifying fractions by peak
Identifying fractions per vial
Importing and exporting data
6.10.1 Printing a run report
6.10.2 Sending data to USB
6.10.3 Sending PDF to USB
Regular maintenance work
Carrying out a data backup
Calibrating the display
Cleaning the nebulizer
Cleaning the check valve
Cleaning the instrument
Cleaning the solid loader
Removing solvent from an used cartridge
Faults, possible causes and solutions (general)
Faults, possible causes and solutions (cartridge)
Faults, possible causes and solutions (solvent delivery)
Faults, possible causes and solutions (sample injection)
Faults, possible causes and solutions (fraction collection)
Faults, possible causes and solutions (detection)
Error messages
Resetting the Fraction collector arm
Replacing the shuttle valve rotor
Taking out of service

Disposal
Returning the instrument
Spare parts and accessories
10.1.1 Accessories
10.1.2 Sample introduction accessories
10.1.3 Spare parts
10.1.4 Tubes
10.1.5 Tools and adapter kits
10.1.6 Wear parts
Folder locations
Finding out separation conditions with the navigator
10.3.1 Open the navigator
10.3.2 TLC Silica
10.3.3 LC-C18
10.3.4 LC-Transfer
Other ManualsLib Projects

Pure Chromatography Instruments

Operation Manual

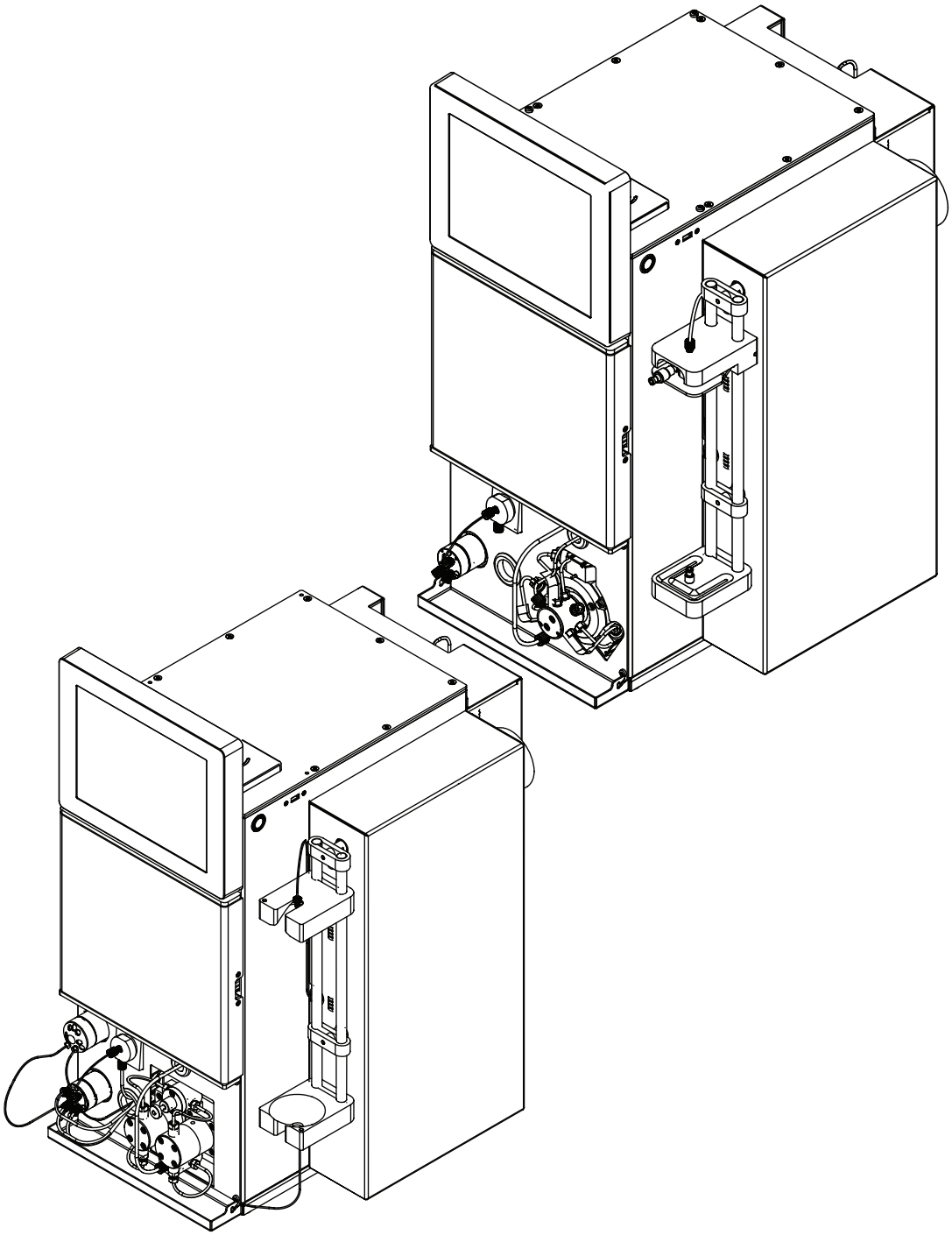

11593990 | E en

Imprint

Product Identification:
Operation Manual (Original) Pure Chromatography Instruments
11593990

Publication date: 05.2021

Version E

BÜCHI Labortechnik AG
Meierseggstrasse 40
Postfach
CH-9230 Flawil 1
E-Mail: quality@buchi.com

BUCHI reserves the right to make changes to the manual as deemed necessary in the light of experience, especially with respect to structure, illustrations and technical details.
This manual is copyrighted. Information from it may neither be reproduced, distributed, or used for competitive purposes, nor made available to third parties. The manufacture of any component with the aid of this manual without prior written agreement is also prohibited.

Table of contents

1 About this document ... 8
1.1 Warning notices in this document ... 8
1.2 Symbols ... 8
1.2.1 Warning symbols ... 8
1.2.2 Mark-ups and symbols ... 8
1.3 Trademarks ... 9
1.4 Connected devices ... 9

2 Safety ... 10
2.1 Proper use ... 10
2.2 Use other than intended ... 10
2.3 Staff qualification ... 10
2.4 Location of warning signs on the product ... 11
2.5 Residual risks ... 11
2.5.1 Faults during operation ... 11
2.5.2 Malware infection due to connections with other devices or network ... 11
2.5.3 Damage to the internal memory due to incorrect shutting down of the instrument ... 12
2.6 Personal protective equipment ... 12
2.7 Modifications ... 12

3 Product description ... 13
3.1 Description of function ... 13
3.2 Configuration ... 14
3.2.1 Front view Pure C-810 / C-815 ... 14
3.2.2 Front view Pure C-830 / C-835 / C-850 ... 15
3.2.3 Rear view ... 15
3.2.4 Connections on gradient valve ... 17
3.3 Type plate ... 17
3.4 Scope of delivery ... 18
3.5 Technical data ... 18
3.5.1 Pure Chromatography Instruments ... 18
3.5.2 Ambient conditions ... 20
3.5.3 Material ... 21

4 Transport and storage ... 22
4.1 Transport ... 22
4.2 Storage ... 22
4.3 Lifting the instrument ... 23

5 Installation ... 24
5.1 Before installation ... 24
5.2 Installation site ... 24
5.3 Securing against earthquakes ... 24
5.4 Establishing electrical connections ... 25
5.5 Establishing solvent connection ... 25
5.6 Installing the solvent level sensor ... 26
5.7 Assigning solvent to solvent lines ... 26
5.8 Calibrating the solvent level sensor ... 27
5.9 Installing the exhaust (ELSD only) ... 28
5.10 Assembling the waste bottle ... 28
5.11 Installing the waste level sensor ... 28
5.12 Calibrating the waste level sensor ... 29
5.13 Assembling the dry air supply (option) ... 29
5.14 Assembling the gas connection (option) ... 30
5.15 Assembling the solvent bottle platform (option) ... 31
5.16 Assembling the sample loop (Prep instruments only) ... 32

6 Operation ... 33
6.1 Control panel ... 33
6.1.1 Layout of control panel ... 33
6.1.2 Enter value ... 34
6.1.3 Menu bar ... 35
6.1.4 Conditions panel ... 37
6.1.5 Collection panel ... 38
6.1.6 Gradient panel ... 39
6.1.7 Run panel ... 40
6.1.8 Solvent selection panel ... 41
6.1.9 Detector selection panel ... 41
6.1.10 Slope detection panel ... 42
6.2 Editing a method ... 42
6.2.1 Selecting a cartridge (Flash mode) ... 42
6.2.2 Selecting a column (Prep mode) ... 44
6.2.3 Selecting a solvent ... 45
6.2.4 Editing the gradient ... 45
6.2.5 Editing detector selection ... 48
6.2.6 Editing the wavelength for the UV detector ... 48
6.2.7 Editing the fraction collection criteria ... 49
6.2.8 Editing the fraction collection time ... 50
6.2.9 Editing the vapor sensor sensitivity ... 52
6.2.10 Saving a method ... 52
6.3 Editing a solvent ... 53
6.3.1 Adding a new solvent ... 53
6.3.2 Deleting a solvent ... 54
6.4 Tasks during a separation ... 54
6.4.1 Introducing a sample into the prep system ... 54
6.4.2 Injecting a sample into the flash system ... 55
6.4.3 Installing and removing a cartridge ... 57
6.4.4 Installing and removing a column ... 58
6.4.5 Inserting the fraction collection tray ... 60
6.4.6 Selecting an existing method ... 61
6.4.7 Selecting values on the dialog box Sample Loading ... 61
6.5 Performing a Flash separation using a method ... 61
6.5.1 Preparing the instrument ... 61
6.5.2 Selecting the flash mode (Pure C-850 only) ... 62
6.5.3 Starting Flash separation using a method ... 62
6.5.4 Changings during a separation ... 62
6.5.5 Ending a Flash separation ... 63
6.5.6 Shutting down the instrument ... 63
6.6 Performing a Flash separation manually ... 63
6.6.1 Preparing the instrument ... 63
6.6.2 Selecting the flash mode (Pure C-850 only) ... 64
6.6.3 Starting Flash separation manually ... 64
6.6.4 Changings during a separation ... 65
6.6.5 Ending a Flash separation ... 65
6.6.6 Shutting down the instrument ... 65
6.7 Performing a Prep separation using a method ... 66
6.7.1 Preparing the instrument ... 66
6.7.2 Selecting the prep mode (Pure C-850 only) ... 66

6.7.3 Starting a Prep separation using a method ... 66
6.7.4 Changings during a separation ... 67
6.7.5 Ending a Prep separation ... 67
6.7.6 Shutting down the instrument ... 67
6.8 Performing a Prep separation manually ... 67
6.8.1 Preparing the instrument ... 68
6.8.2 Selecting the prep mode (Pure C-850 only) ... 68
6.8.3 Starting a separation ... 68
6.8.4 Changings during a separation ... 69
6.8.5 Ending a Prep separation ... 69
6.8.6 Shutting down the instrument ... 69
6.9 Identifying fractions ... 70
6.9.1 Identifying fractions by peak ... 70
6.9.2 Identifying fractions per vial ... 71
6.10 Importing and exporting data ... 71
6.10.1 Printing a run report ... 71
6.10.2 Sending data to USB ... 72
6.10.3 Sending PDF to USB ... 72

7 Cleaning and servicing ... 73
7.1 Regular maintenance work ... 73
7.2 Carrying out a data backup ... 74
7.3 Calibrating the display ... 74
7.4 Cleaning the nebulizer ... 75
7.5 Cleaning the check valve ... 76
7.6 Cleaning the instrument ... 77
7.7 Cleaning the solid loader ... 78
7.8 Removing solvent from an used cartridge ... 78

8 Help with faults ... 79
8.1 Faults, possible causes and solutions (general) ... 79
8.2 Faults, possible causes and solutions (cartridge) ... 79
8.3 Faults, possible causes and solutions (solvent delivery) ... 79
8.4 Faults, possible causes and solutions (sample injection) ... 81
8.5 Faults, possible causes and solutions (fraction collection) ... 81
8.6 Faults, possible causes and solutions (detection) ... 82
8.7 Error messages ... 83
8.8 Resetting the Fraction collector arm ... 89
8.9 Replacing the shuttle valve rotor ... 90

9 Taking out of service and disposal ... 92
9.1 Taking out of service ... 92
9.2 Disposal ... 92
9.3 Returning the instrument ... 92

10 Appendix ... 93
10.1 Spare parts and accessories ... 93
10.1.1 Accessories ... 93
10.1.2 Sample introduction accessories ... 94
10.1.3 Spare parts ... 95
10.1.4 Tubes ... 95
10.1.5 Tools and adapter kits ... 95
10.1.6 Wear parts ... 96
10.2 Folder locations ... 96
10.3 Finding out separation conditions with the navigator ... 97
10.3.1 Open the navigator ... 97
10.3.2 TLC Silica ... 97
10.3.3 LC-C18 ... 98
10.3.4 LC-Transfer ... 99

1 About this document

This operation manual is applicable for all variants of the instrument.
Read this operation manual before operating the instrument and follow the instructions to ensure safe and trouble-free operation.
Keep this operation manual for later use and pass it on to any subsequent user or owner.
BÜCHI Labortechnik AG accepts no liability for damage, faults and malfunctions resulting from not following this operation manual.
If you have any questions after reading this operation manual:

▶ Contact BÜCHI Labortechnik AG Customer Service.

https://www.buchi.com/contact

1.1 Warning notices in this document

Warning notices warn you of dangers that can occur when handling the device.
There are four danger levels, each identifiable by the signal word used.

Signal word	Meaning
DANGER	Indicates a danger with a high level of risk which could result in death or serious injury if not prevented.
WARNING	Indicates a danger with a medium level of risk which could result in death or serious injury if not prevented.
CAUTION	Indicates a danger with a low level of risk which could result in minor or medium-severity injury if not prevented.
NOTICE	Indicates a danger that could result in damage to property.

1.2 Symbols

The following symbols are displayed in this operation manual or on the device:

1.2.1 Warning symbols

Symbol	Meaning
	General warning
	Dangerous electrical voltage
	Flammable substances
	Laser class 1

1.2.2 Mark-ups and symbols

NOTE

This symbol draws attention to useful and important information.

☑ This character draws attention to a requirement that must be met before the instructions below are carried out.

▶ This character indicates an instruction that must be carried out by the user.

⇨ This character indicates the result of a correctly carried out instruction.

Mark-up	Explanation
Window	Software Windows are marked-up like this.
Tab	Tabs are marked-up like this.
Dialog	Dialogs are marked-up like this.
[Button]	Buttons are marked-up like this.
[Field names]	Field names are marked-up like this.
[Menu / Menu item]	Menus or menu items are marked-up like this.
Status	Status is marked-up like this.
Signal	Signals are marked-up like this.

1.3 Trademarks

Product names and registered or unregistered trademarks that are used in this document are used only for identification and remain the property of the owner in each case.

1.4 Connected devices

In addition to these operating instructions, follow the instructions and specifications in the documentation for the connected devices.

2 Safety

2.1 Proper use

The instrument is designed and built for laboratories.
The instrument can be used for the following tasks:

- Purification
- Separation of one or more compounds from a mixture

2.2 Use other than intended

Use of any kind other than that described in Chapter 2.1 "Proper use", page 10 and any application that does not comply with the technical specifications (See Chapter 3.5 "Technical data", page 18) constitutes use other than intended.
In particular, the following applications are not permissible:

- Use of the instrument in areas which require explosion-safe instruments.
- Use of the instrument with solvents containing peroxides.
- Use the ELSD without connected exhaust.
- Use the instrument for production purposes.

2.3 Staff qualification

Unqualified persons are unable to identify risks and are therefore exposed to greater dangers.
The device may only be operated by suitably qualified laboratory staff.
These operating instructions are aimed at the following target groups:

Users

Users are persons that meet the following criteria:

- They have been instructed in the use of the device.
- They are familiar with the contents of these operating instructions and the applicable safety regulations and apply them.
- They are able on the basis of their training or professional experience to assess the risks associated with the use of the device.

Operator

The operator (generally the laboratory manager) is responsible for the following aspects:

- The device must be correctly installed, commissioned, operated and serviced.
- Only suitably qualified staff may be assigned the task of performing the operations described in these operating instructions.
- The staff must comply with the local applicable requirements and regulations for safe and hazard-conscious working practices.
- Safety-related incidents that occur while using the device should be reported to the manufacturer (quality@buchi.com).

BUCHI service technicians

Service technicians authorized by BUCHI have attended special training courses and are authorized by BÜCHI Labortechnik AG to carry out special servicing and repair measures.

2.4 Location of warning signs on the product

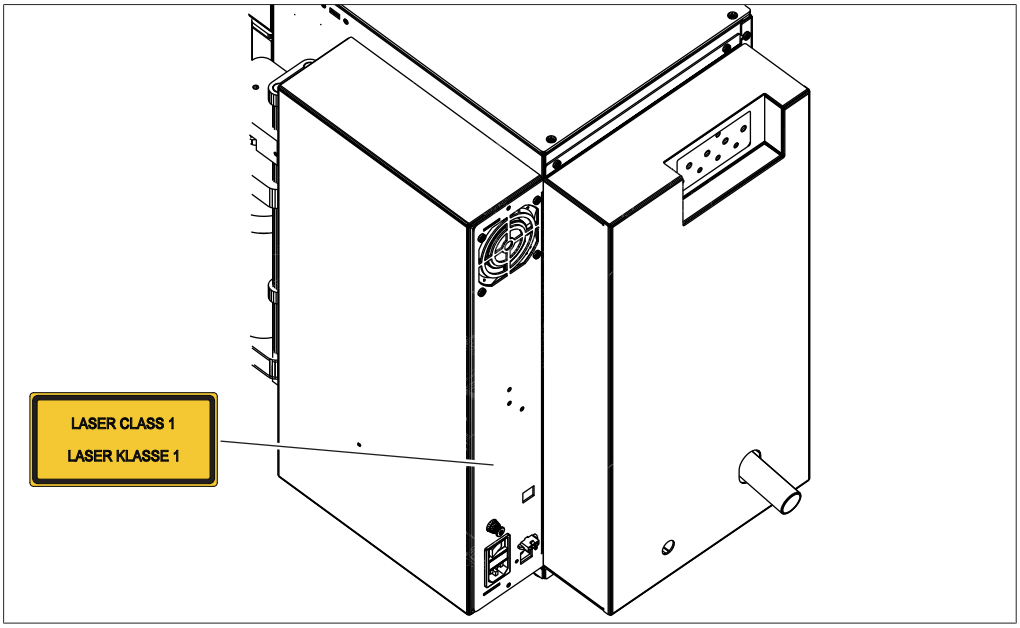

Fig. 1: Location of the warning signs

Laser class 1

2.5 Residual risks

The device has been developed and manufactured using the latest technological advances. Nevertheless, risks to persons, property or the environment can arise if the device is used incorrectly.
Appropriate warnings in this manual serve to alert the user to these residual dangers.

2.5.1 Faults during operation

If a device is damaged, sharp edges, moving parts or exposed electrical wires can cause injuries.

- ▶ Regularly check device for visible damage.
- ▶ If faults occur, switch off the device immediately, unplug the power cord and inform the operator.
- ▶ Do not continue to use devices that are damaged.

2.5.2 Malware infection due to connections with other devices or network

Connections with other devices or a network can cause a malware infection to the instrument.

- ▶ Install antivirus software and firewall on the instrument before connecting it to other devices or network.

2.5.3 Damage to the internal memory due to incorrect shutting down of the instrument

Incorrect shutting down of the instrument can cause damage to the internal memory.

- ▶ Shut down the instrument as described. See Chapter 6 "Operation", page 33

2.6 Personal protective equipment

Depending on the application, hazards due to heat and/or corrosive chemicals may arise.

- ▶ Always wear appropriate personal protective equipment such as safety goggles, protective clothing and gloves.
- ▶ Make sure that the personal protective equipment meets the requirements of the safety data sheets for all chemicals used.

2.7 Modifications

Unauthorized modifications can effect safety and lead to accidents.

- ▶ Use only genuine BUCHI accessories, spare parts and consumables.
- ▶ Carry out technical changes only with prior written approval from BUCHI.
- ▶ Only allow changes to be made by BUCHI service technicians.

BUCHI accepts no liability for damage, faults and malfunctions resulting from unauthorized modifications.

3 Product description

3.1 Description of function

Pure instruments are purification devices designed to purify complex samples by either flash chromatography, prep chromatography or by both.

- Flash chromatography has the ability to separate gram size samples in short period.
- Prep-HPLC has the ability to separate complex samples at high resolution.

Pure instruments allow:

- 4 different solvents
- Injection of liquid or solid sample
- Separation on a cartridge or column
- Identifying the compounds by UV and/or ELS detection
- Collecting the desired fractions

Pure instrument schematic:

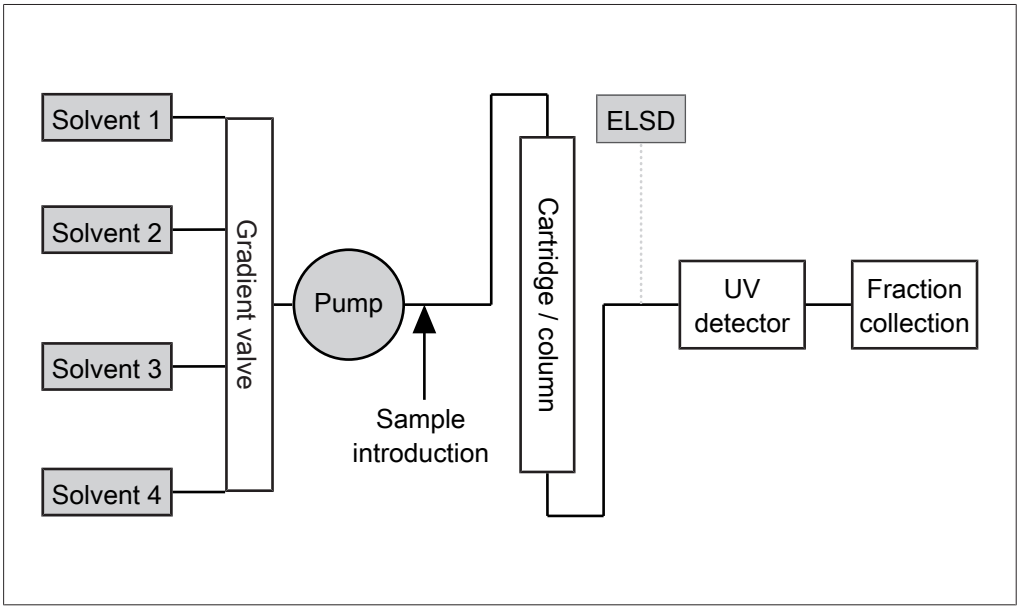

3.2 Configuration

3.2.1 Front view Pure C-810 / C-815

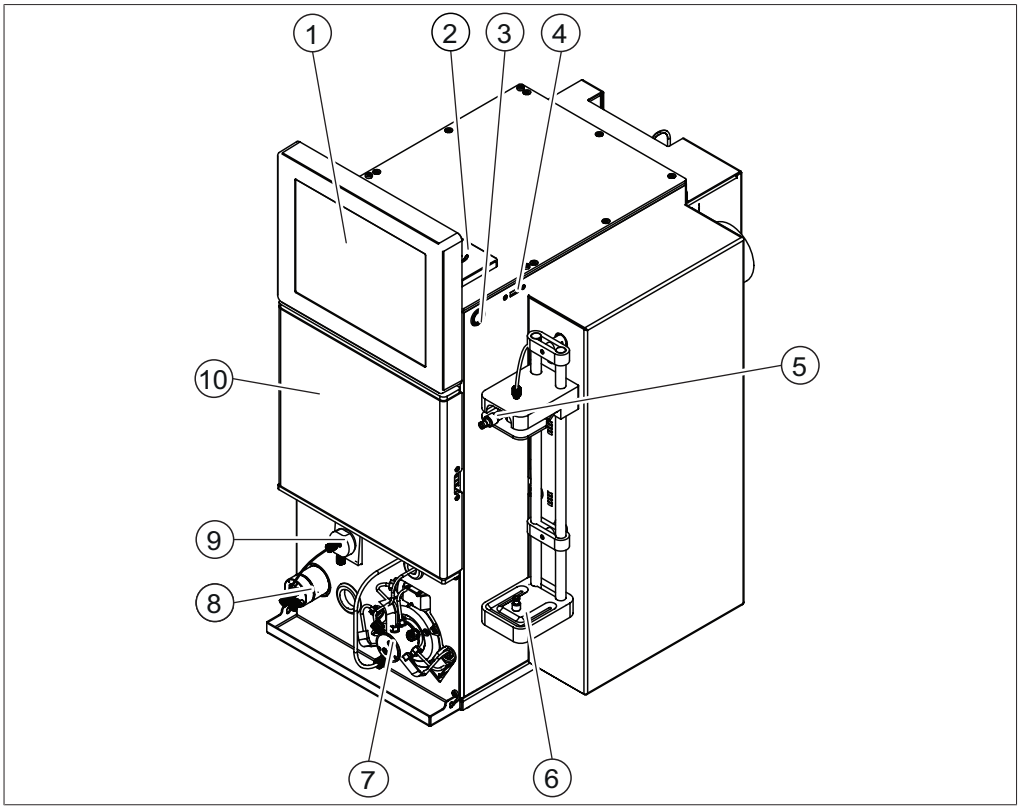

Fig. 2: Front view Pure C-810 / C-815

1	Control panel	2	RFID reader
3	On/Off switch	4	USB Port
5	Injection port	6	Cartridge holder
7	Flash pump	8	ELSD flow split valve (C-815 only)
9	ELSD nebulizer (C-815 only)	10	Fraction collection bay

3.2.2 Front view Pure C-830 / C-835 / C-850

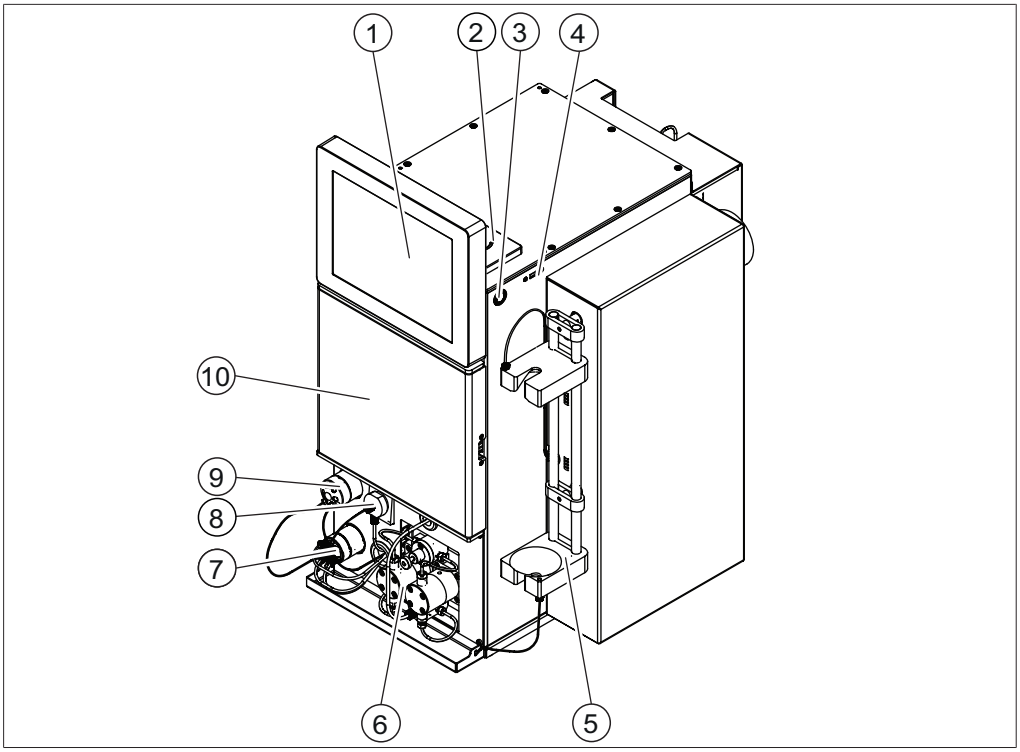

Fig. 3: Front view Pure C-830 / C-835 / C-850

1	Control panel	2	RFID reader (C-850 only)
3	On/Off switch	4	USB Port
5	Column holder	6	Prep HPLC pump
7	ELSD flow split valve (C-835 / C-850 only)	8	ELSD nebulizer (C-835 / C-850 only)
9	Prep sample injection valve	10	Fraction collection bay

3.2.3 Rear view

NOTE

All electrical connections are not limited energy.

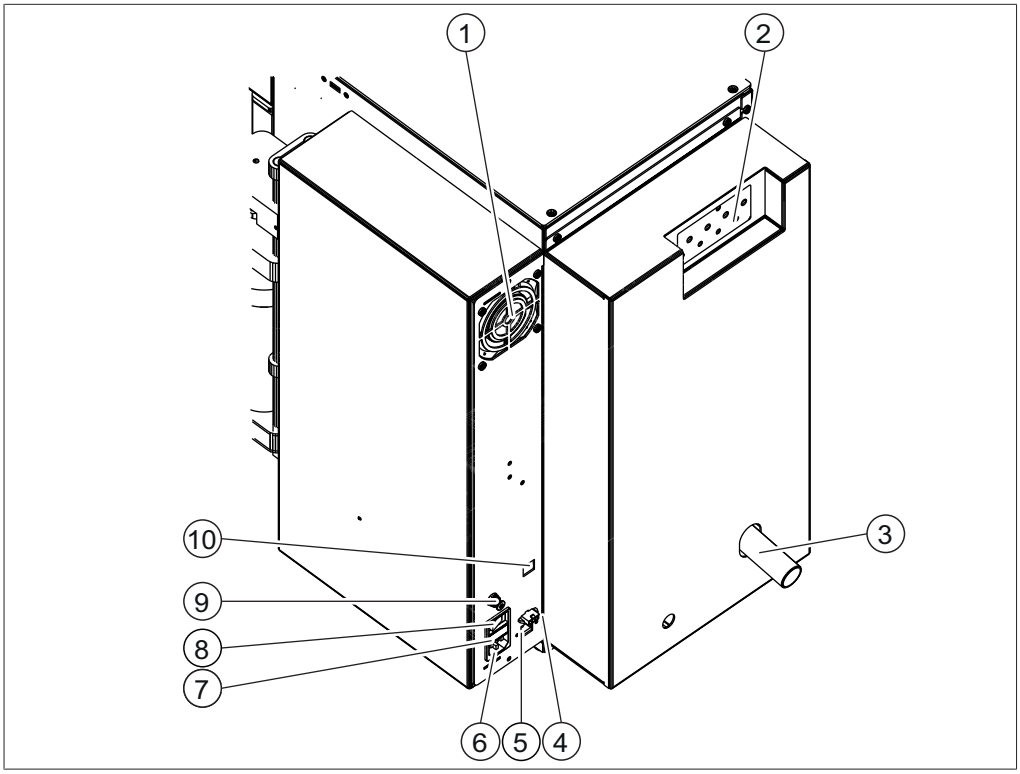

Fig. 4: Rear view

1	Ventilation slot	2	Gradient valve (See Chapter 3.2.4 "Connections on gradient valve", page 17)
3	Exhaust (used for instruments with ELSD only)	4	Signal connection (for external air supply)
5	USB ports	6	Power supply connection
7	Fuse	8	On/Off master switch
9	Pressurized air inlet	10	LAN port

3.2.4 Connections on gradient valve

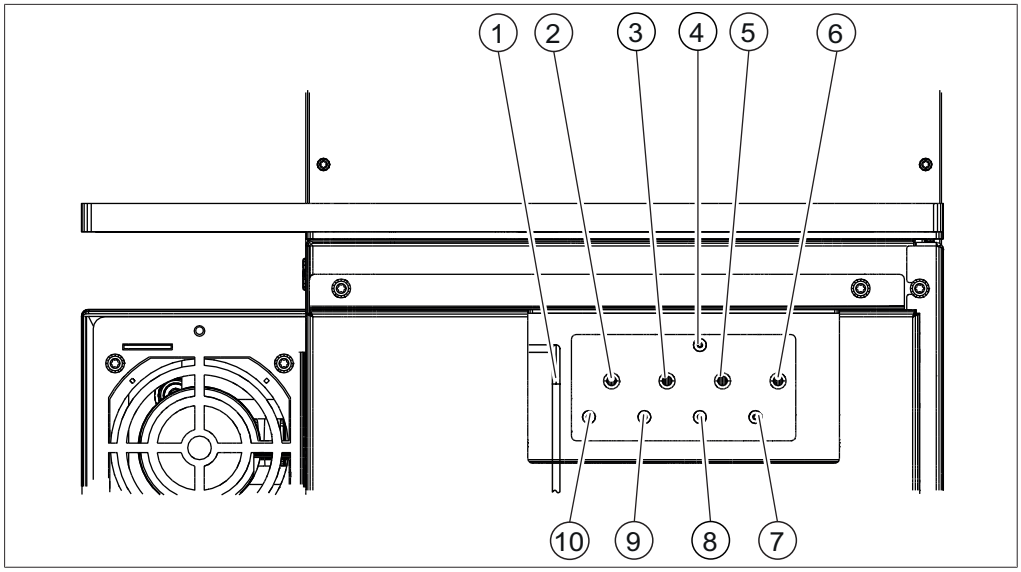

Fig. 5: Connections on the rear side

1	Waste line	2	Solvent line 4
3	Solvent line 3	4	Waste level sensor
5	Solvent line 2	6	Solvent line 1
7	Solvent level sensor line 1	8	Solvent level sensor line 2
9	Solvent level sensor line 3	10	Solvent level sensor line 4

3.3 Type plate

The type plate identifies the instrument. The type plate is located at the rear of the instrument.

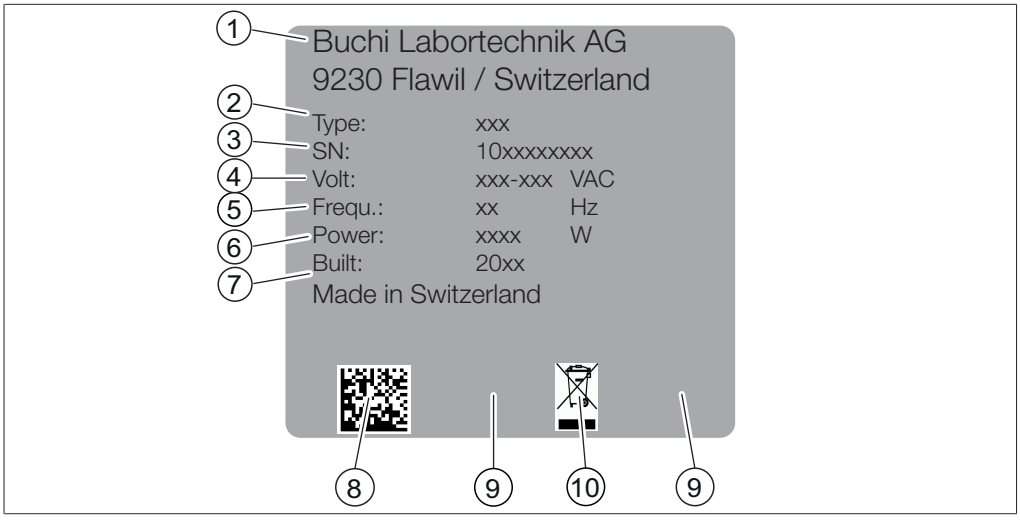

Fig. 6: Type Plate

1	Company name and address	2	Instrument name
3	Serial number	4	Input voltage range
5	Frequency	6	Power consumption maximum
7	Year of manufacture	8	Product code
9	Approvals	10	Symbol for "Do not dispose of as household waste"

3.4 Scope of delivery

NOTE

The scope of delivery depends of the configuration of the purchase order.

Accessories are delivered as per the purchase order, order confirmation, and delivery note.

3.5 Technical data

3.5.1 Pure Chromatography Instruments

	Pure C-810	**Pure C-815**	**Pure C-830**	**Pure C-835**	**Pure C-850**
Dimension (W x D x H)	365 x 570 x 680 mm	365 x 570 x 680 mm	365 x 570 x 680 mm	365 x 570 x 680 mm	365 x 570 x 680 mm
Weight	25 kg	27 kg	31 kg	33 kg	33 kg
Power consumption	350 W	350 W	350 W	350 W	350 W
Connection voltage	100 - 240 V ± 10 %	100 - 240 V ± 10 %	100 - 240 V ± 10 %	100 - 240 V ± 10 %	100 - 240 V ± 10 %
Frequency	50 - 60 Hz	50 - 60 Hz	50 - 60 Hz	50 - 60 Hz	50 - 60 Hz
Fuse	4 A	4 A	4 A	4 A	4 A
Overvoltage category	II	II	II	II	II

	Pure C-810	Pure C-815	Pure C-830	Pure C-835	Pure C-850
Pollution degree	2	2	2	2	2
IP Code	IP 20	IP 20	IP 20	IP 20	IP 20
Solvents	4	4	4	4	4
Gas pressure (maximum)	8 bar	8 bar	8 bar	8 bar	8 bar
Compressed air	oil and dust free	oil and dust free	oil and dust free	oil and dust free	oil and dust free
USB port	3	3	3	3	3
LAN port (RJ45)	1	1	1	1	1
RFID reader (racks)	Yes	Yes	Yes	Yes	Yes
RFID reader (cartridges)	Yes	Yes	No	No	Yes
Fraction collector bay	closed	closed	closed	closed	closed
Lighted fraction collector bay	Yes	Yes	Yes	Yes	Yes
Solvent level sensor	Yes	Yes	Yes	Yes	Yes
Waste level sensor	Yes	Yes	Yes	Yes	Yes
Vapor sensor	Yes	Yes	Yes	Yes	Yes

Pump Flash Mode

	Pure C-810	Pure C-815	Pure C-830	Pure C-835	Pure C-850
Gradient	binary	binary	-	-	binary
Pressure range	0 - 50 bar	0 - 50 bar	-	-	0 - 50 bar
Flow rate	0 - 250 mL/min	0 - 250 mL/min	-	-	0 - 250 mL/min
Flow rate accuracy	< 2 %	< 2 %	-	-	< 2 %
Functional principle	self-priming	self-priming	-	-	self-priming
Specification	3 pistons radial arranged	3 pistons radial arranged	-	-	2 pistons parallel arranged

Pump Prep Mode

	Pure C-810	Pure C-815	Pure C-830	Pure C-835	Pure C-850
Gradient	-	-	binary	binary	binary

	Pure C-810	Pure C-815	Pure C-830	Pure C-835	Pure C-850
Pressure range	-	-	0-300 bar	0-300 bar	0-300 bar
Flow rate	-	-	0 - 100 ml/ min	0 - 100 ml/ min	0 - 100 ml/ min
Flow rate accuracy	-	-	< 2 %	< 2 %	< 2 %
Functional principle	-	-	self-priming	self-priming	self-priming
Specification	-	-	2 pistons parallel ar-ranged	2 pistons parallel ar-ranged	2 pistons parallel ar-ranged

UV Detector

	Pure C-810	Pure C-815	Pure C-830	Pure C-835	Pure C-850
UV - Vis wavelength range	200 - 800 nm	200 - 800 nm	200 - 800 nm	200 - 800 nm	200 - 800 nm
Light sources	Halogen / Deuterium	Halogen / Deuterium	Halogen / Deuterium	Halogen / Deuterium	Halogen / Deuterium
Detector	DAD	DAD	DAD	DAD	DAD
DAD scan	entire range	entire range	entire range	entire range	entire range

ELSD Detector

	Pure C-810	Pure C-815	Pure C-830	Pure C-835	Pure C-850
Light output laser	-	0.3 mW	-	1 mW	1 mW
Pressure carrier air	-	~0.8 bar	-	~0.8 bar	~0.8 bar
Pressure spray air	-	3 - 3.5 bar	-	3 - 3.5 bar	3 - 3.5 bar
Flow rate air	-	2 - 2.5 L/ min	-	2 - 2.5 L/ min	2 - 2.5 L/ min

3.5.2 Ambient conditions

For indoor use only.

Max. altitude above sea level	2000 m
Ambient temperature	5–40°C (25°C) No maximum performance above 25°C
Maximum relative humidity	80% for temperatures up to 31°C
Storage temperature	max. 45 °C

3.5.3 Material

Component	Materials of construction
Housing	Powder coated steel 1.4301
Fraction collection bay	PMMA / PET
Pump head	PEEK
Pump cover	PP
Pump excenter housing	Aluminum
Tubings	FEP
Fitting	POM
Valve screw fitting	POM
Ferrule	ETFE
Cone ring	POM
Radial seal	PTFE
Pistons	Ceramic

4 Transport and storage

4.1 Transport

NOTICE

Risk of breakage due to incorrect transportation

- ▶ Make sure that all parts of the device are safely packed in such a way as to prevent breakage, ideally in the original box.
- ▶ Avoid sharp movements during transit.

- ▶ After transportation, check the device for damage.
- ▶ Damage that has occurred in transit should be reported to the carrier.
- ▶ Keep packing for future transportation.

4.2 Storage

- ▶ Make sure that the ambient conditions are complied with (see Chapter 3.5 "Technical data", page 18).
- ▶ Make sure a clean solvent like ethanol or isopropanol is in the pump.
- ▶ Wherever possible, store the device in its original packaging.
- ▶ After storage, check the device, all seals and tubing for damage and replace if necessary.

4.3 Lifting the instrument

⚠ WARNING

Danger due to incorrect transportation

The possible consequences are crushing injuries, cuts and breakages.

- ▶ The instrument should be transported by two persons at the same time.
- ▶ Lift the instrument at the points indicated.

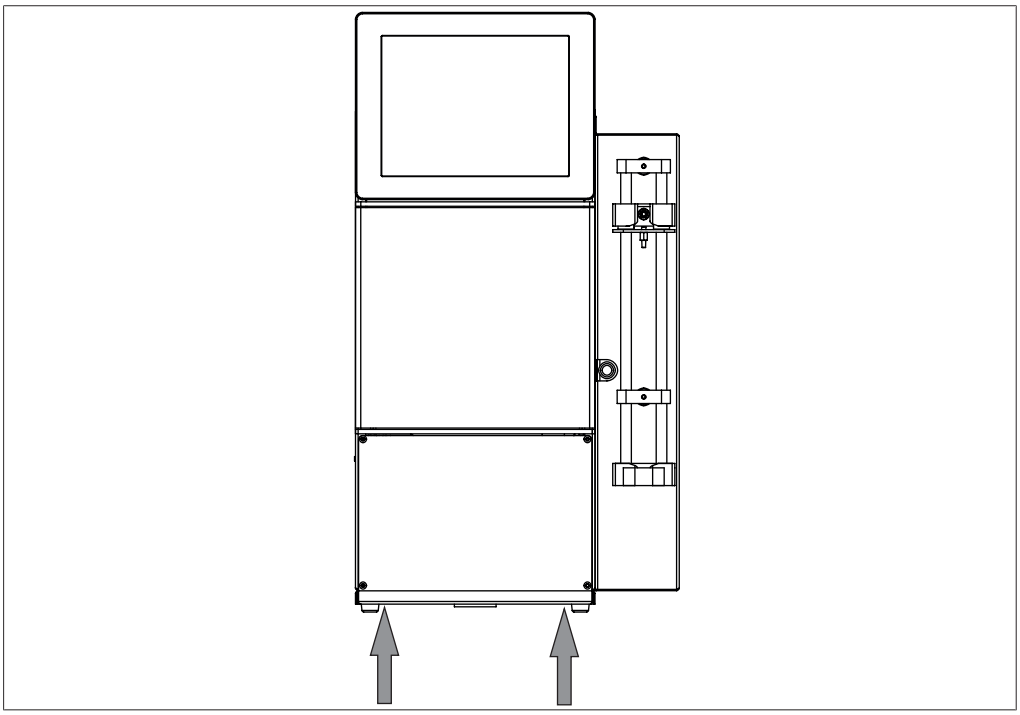

- ▶ Lift the instrument – this requires two persons each lifting at one of the points indicated on the bottom of the instrument.

5 Installation

5.1 Before installation

NOTICE

Instrument damage due to switching it on too early.

Switching on the instrument too early after transportation can cause damage.

▶ Climatize the instrument after transportation.

5.2 Installation site

The installation site must meet the following requirements:

- Firm, level surface.
- Take into account the maximum product dimensions and weight. See Chapter 3.5 "Technical data", page 18
- Clearance on each side of the instrument must be at least 200 mm.
- Do not expose the instrument to any external thermal loads, such as direct solar radiation.
- Do not expose the instrument to increased electromagnetic emissions. Electromagnetic fields in the frequency range between 200 to 300 MHz can cause the instrument to operate incorrectly.
- Make sure that the installation site meets the requirements of the safety data sheets for all solvents and samples used.

NOTE

Make sure that the power supply can be disconnected at any time in an emergency.

5.3 Securing against earthquakes

The instrument has an earthquake fixing point to protect the device against falling.

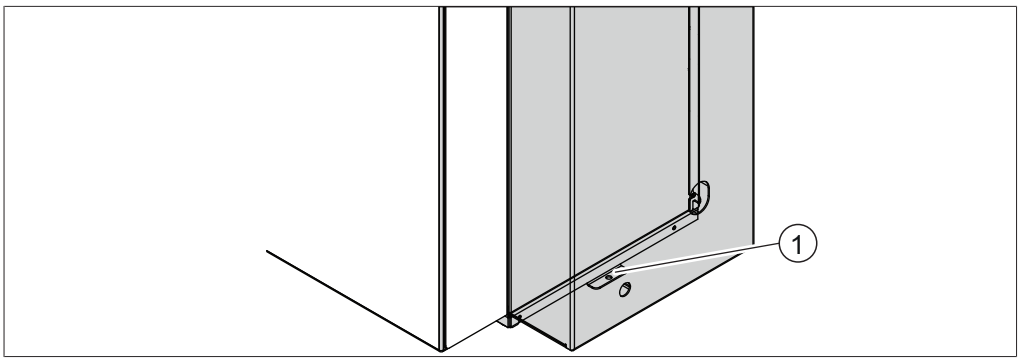

Fig. 7: Securing against earthquakes

1 Fixing point

▶ Tie the lashing mount to a fixed point using strong cord or a wire.

5.4 Establishing electrical connections

NOTE

Observe the legal requirements when connecting the instrument to the power supply.

- ▶ Use additional electrical safety features (e.g., residual-current circuit breakers) to comply with local laws and regulations.

The power supply must fulfil the following conditions:

1. Provide the mains voltage and frequency specified on the type plate of the instrument.
2. Be designed for the load imposed by the instruments connected.
3. Be equipped with suitable fuses and electrical safety features.
4. Be equipped with proper earthing.

NOTICE

Risk of property damage and diminished performance due to use of unsuitable power cables.

The power supply cables supplied with the product by BUCHI precisely match the requirements of the device. If other power cables that do not meet those requirements are used, the device may be damaged and/or its performance diminished.

- ▶ Use only the power supply cables supplied with the product or ordered separately from BUCHI.
- ▶ If using any other power supply cables, make sure that they match the specifications on the type plate.

- ▶ Make sure that all connected devices are earthed.
- ▶ Plug the power cable into the connection on the instrument. See Chapter 3.2 "Configuration", page 14
- ▶ Plug the mains plug into the mains outlet socket.

5.5 Establishing solvent connection

NOTICE

Solvent bottles on top of the instrument.

Solvent bottles on top of the instrument can cause property damages.

- ▶ Locate the solvent bottles next to the instrument.
- ▶ Use the optional solvent bottle platform.

Precondition:

☑ Make sure that the instrument is not connected to the power supply.

▶ Attach all solvent lines to the instrument. Connections see Chapter 3.2.4 "Connections on gradient valve", page 17

▶ Put the other end of the solvent line into the solvent bottle.

▶ Assign the solvent to the solvent lines. See Chapter 5.7 "Assigning solvent to solvent lines", page 26

▶ Install the solvent level sensor. See Chapter 5.6 "Installing the solvent level sensor", page 26

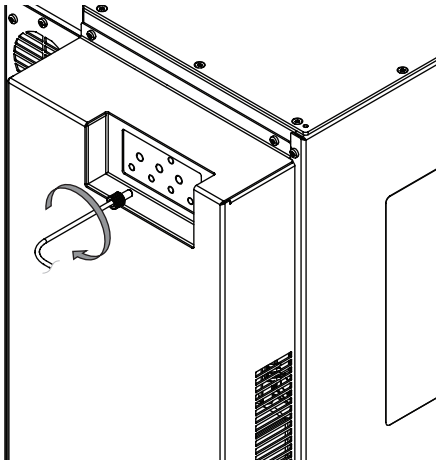

5.6 Installing the solvent level sensor

Precondition:

☑ Make sure that the instrument is not connected to the power supply.

▶ Attach all solvent level sensors to the instrument. Connections see Chapter 3.2.4 "Connections on gradient valve", page 17

▶ Calibrate the solvent level sensors. See Chapter 5.8 "Calibrating the solvent level sensor", page 27

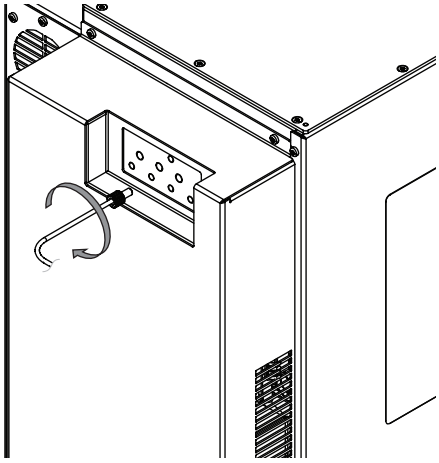

5.7 Assigning solvent to solvent lines

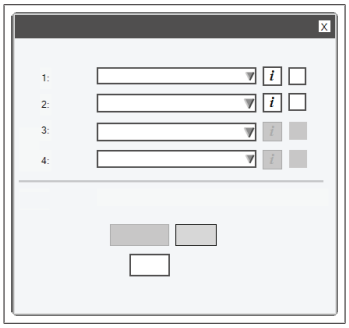

Navigation path

➔ Tools ➔ Solvent Loading

Precondition:

☑ The solvent bottle is connected to the instrument. See Chapter 5.5 "Establishing solvent connection", page 25

☑ The solvent you wish to use is part of the solvent library. See Chapter 6.3 "Editing a solvent", page 53

▶ Navigate to the *Solvent Loading* dialog according to the navigation path.

⇨ The display shows the dialog box *Solvent Loading*.

▶ Tap the drop-down list next to **Line 1**.

⇨ The display shows a drop-down list with selectable solvents.

▶ Select the solvent which is connected to solvent line 1.

⇨ The solvent for Line 1 is assigned.

⇨ The drop-down list closes.

▶ Repeat the solvent selection for each line.

▶ Activate the checkbox next to the line you wish to prime.

▶ Tap the button *[Auto Prime]*.

▶ Wait till priming finished.

▶ Tap the button *[Close]*.

⇨ All lines are assigned with solvents.

⇨ The dialog box closes.

5.8 Calibrating the solvent level sensor

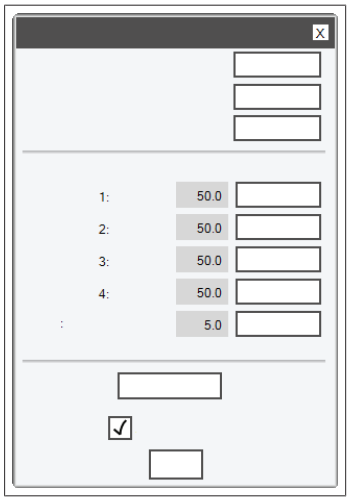

Navigation path

➔ Tools ➔ Calibration and Defaults

Precondition:

☑ The solvent level sensor is not covered by solvent.

▶ Navigate to the *Calibration* dialog according to the navigation path.

⇨ The display shows the dialog box *Calibration*.

▶ Tap *[Zero]* for the related solvent line.

▶ Tap the button *[Close]*.

⇨ The dialog box closes.

5.9 Installing the exhaust (ELSD only)

▶ Press the exhaust gas hose (2) on the exhaust (1).

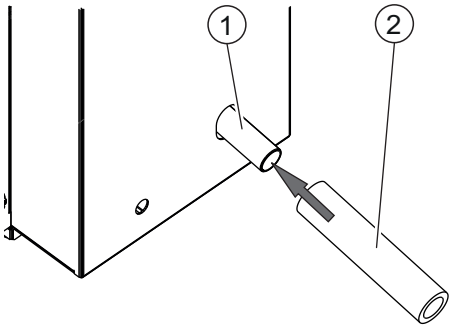

5.10 Assembling the waste bottle

NOTICE

Waste bottle on top of the instrument

Waste bottle on top of the instrument can cause property damages.

▶ Make sure that there is a decline between the connection on the instrument and the waste bottle.

▶ Put the waste line into the waste bottle.

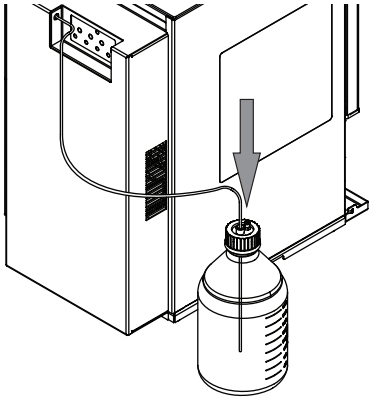

5.11 Installing the waste level sensor

Precondition:

☑ Make sure that the instrument is not connected to the power supply.

▶ Attach the waste level sensor to the instrument. Connections see Chapter 3.2.4 "Connections on gradient valve", page 17

▶ Calibrate the waste level sensor. See Chapter 5.12 "Calibrating the waste level sensor", page 29

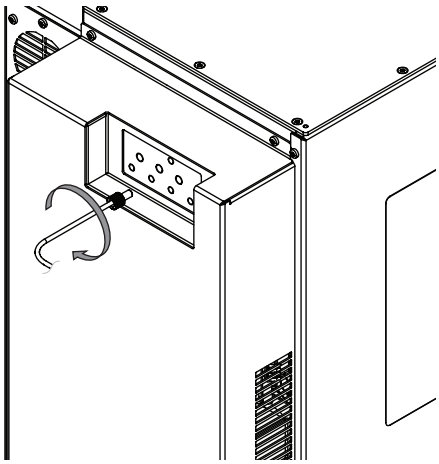

5.12 Calibrating the waste level sensor

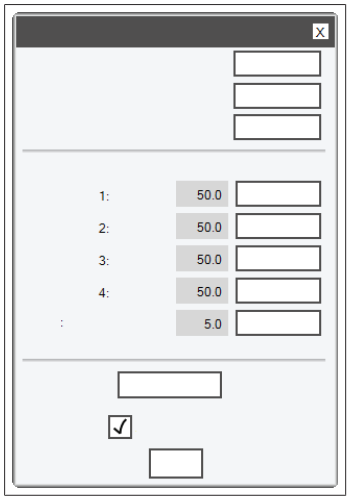

Navigation path

➔ Tools ➔ Calibration and Defaults

Precondition:
☑ The waste level sensor is not covered by liquid waste.

▶ Navigate to the *Calibration* dialog according to the navigation path.

⇨ The display shows the dialog box *Calibration*.

▶ Tap *[Zero]* for *[Waste]*.
▶ Tap the button *[Close]*.

⇨ The dialog box closes.

5.13 Assembling the dry air supply (option)

▶ Connect the signal cable from the air supply to the instrument.

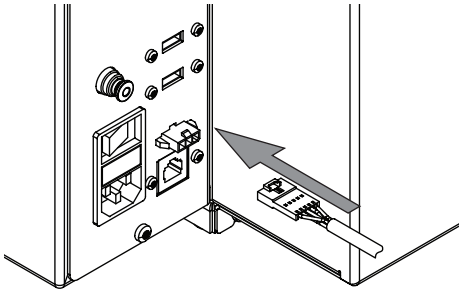

▶ Connect the gas connection. See Chapter 5.14 "Assembling the gas connection (option)", page 30.

5.14 Assembling the gas connection (option)

Precondition:

☑ The gas supply complies with the specifications. See Chapter 3.5 "Technical data", page 18

▶ Cut 50 mm from the gas tubing.

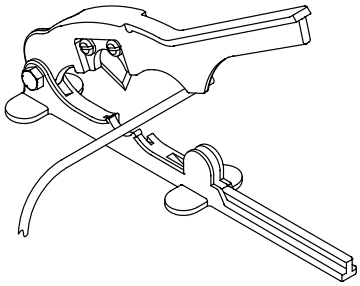

▶ Attach the cut tubing to the air filter.

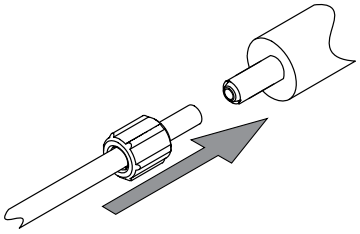

▶ Secure the tubing in place.

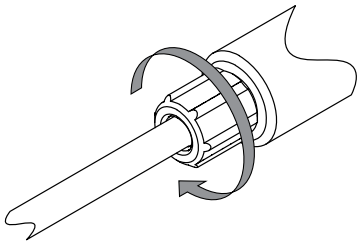

▶ Attach the tubing from gas supply to the other side of the air filter.

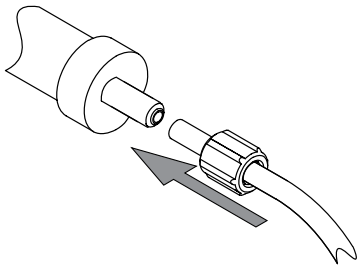

▶ Secure the tubing in place.

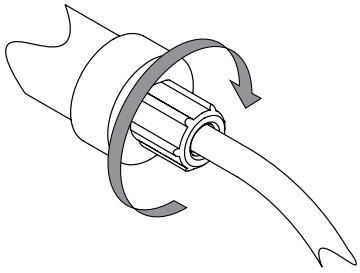

▶ Connect the tubing from the gas supply to the instrument.

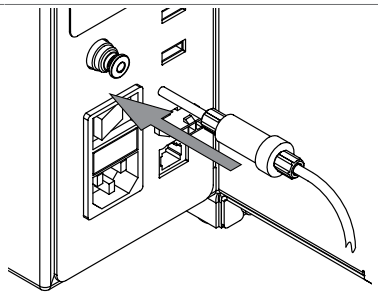

5.15 Assembling the solvent bottle platform (option)

NOTICE

Waste bottle on top of the instrument

Waste bottle on top of the instrument can cause property damages.

▶ Do not place the waste bottle an the solvent bottle platform.

▶ Turn the solvent bottle platform upside down.

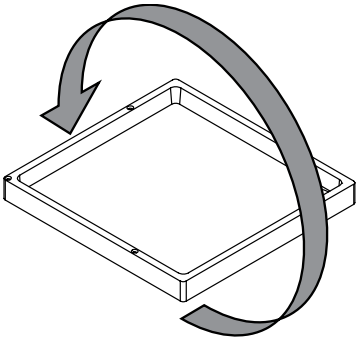

▶ Attach the drain line adapter to the solvent bottle platform

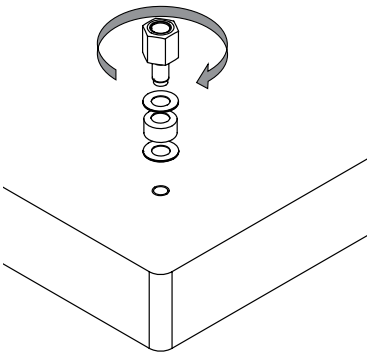

▶ Attach the drain line to the drain line adapter.

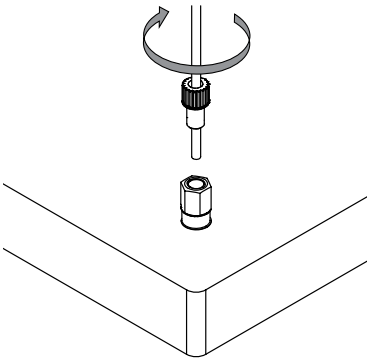

▶ Attach the solvent bottle platform to the instrument with screws.

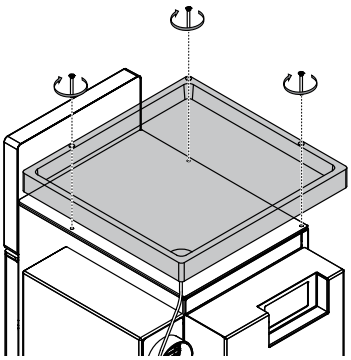

5.16 Assembling the sample loop (Prep instruments only)

▶ Attach the sample loop to the instrument at the position indicated.

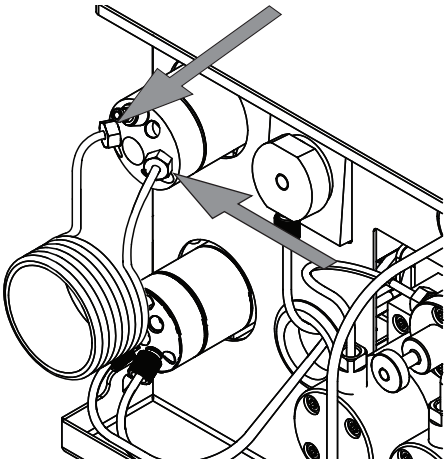

6 Operation

6.1 Control panel

6.1.1 Layout of control panel

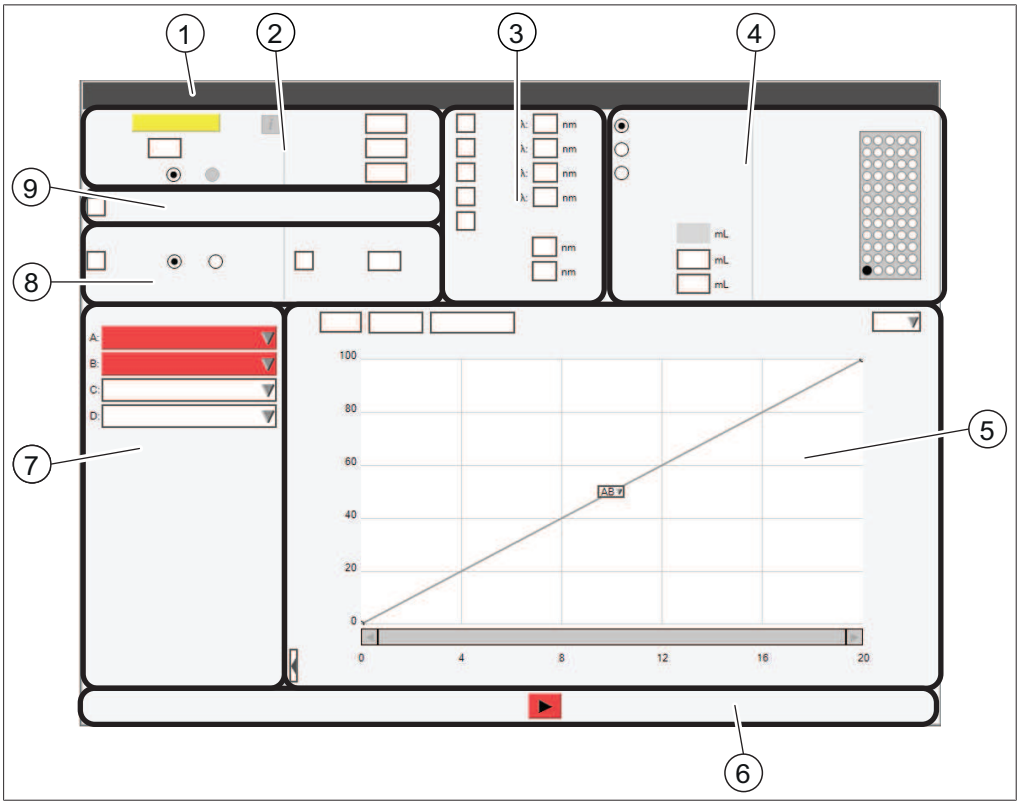

Fig. 8: Display

No.	Description	Function
1	*[Menu]* bar	Shows the available menus. See Chapter 6.1.3 "Menu bar", page 35
2	*[Conditions]* panel	Shows the properties and default settings of the installed column / cartridge. See Chapter 6.1.4 "Conditions panel", page 37
3	*[Wavelength]* panel	Shows available wavelengths and scan options.
4	*[Collection]* panel	Shows collection options. See Chapter 6.1.5 "Collection panel", page 38
5	*[Gradient]* panel	Shows chromatograms and gradient table. See Chapter 6.1.6 "Gradient panel", page 39
6	*[Run]* panel	Shows the operation options. See Chapter 6.1.7 "Run panel", page 40

No.	Description	Function
7	*[Solvent selection]* panel	Shows selectable solvents. See Chapter 6.1.8 "Solvent selection panel", page 41
8	*[Detector settings]* panel	Shows selectable detector options and its settings. See Chapter 6.1.9 "Detector selection panel", page 41
9	*[Slope detection]* panel	Shows selectable slope detection options. See Chapter 6.1.10 "Slope detection panel", page 42

6.1.2 Enter value

Enter numbers

▶ Tab on an entry field.

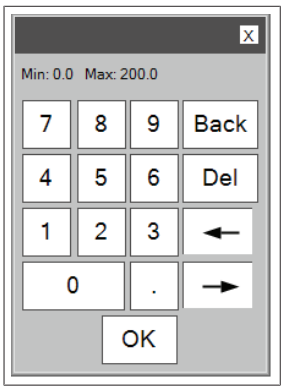

⇨ The display shows a dialog box with a numeric input box.

▶ Enter the value.

▶ Tap the button *[OK]*.

⇨ The value is saved.

⇨ The dialog box closes.

Enter names

▶ Tab on an entry field.

⇨ The display shows a dialog with an alphanumeric input box.

▶ Enter the value.

▶ Tap the button *[OK]*.

⇨ The value is saved.

⇨ The dialog box closes.

6.1.3 Menu bar

The following menus are available:

Menu	Submenu / Action	Explanation
[File]	*[Open Method]*	Load an existing method. See Chapter 6.4.6 "Selecting an existing method", page 61
	[Save Method]	Save an edited method. See Chapter 6.2.10 "Saving a method", page 52
	[Save Method as]	Save an edited method with another name. See Chapter 6.2.10 "Saving a method", page 52
	[Open Run]	Load a completed run.
	[Print Run Report]	See Chapter 6.10.1 "Printing a run report", page 71
	[Print PDF to USB]	See Chapter 6.10.3 "Sending PDF to USB", page 72
	[Exit]	Exit the Pure software to Windows® system software.
	[Shut down]	The instrument shuts down.
[Mode]	*[Flash]*	Select the Flash mode. See Chapter 6.5.2 "Selecting the flash mode (Pure C-850 only)", page 62
	[Preparative]	Select the Prep mode. See Chapter 6.7.2 "Selecting the prep mode (Pure C-850 only)", page 66
[View]	*[Setup]*	If *[Setup]* is marked up, the instrument is in setup mode.
	[Run in Progress]	If *[Run in Progress]* is marked, a run is in progress.
	[Past Run]	If *[Past Run]* is marked up, the instrument is in the past run mode.

Menu	Submenu / Action	Explanation
[Tools]	*[Solvent Loading]*	Assign a solvent to a solvent line. See Chapter 5.7 "Assigning solvent to solvent lines", page 26
	[Solvent Definition]	Define solvents. See Chapter 6.3 "Editing a solvent", page 53
	[Vapor Sensors and Limits]	Edit the vapor sensor sensitivity. See Chapter 6.2.9 "Editing the vapor sensor sensitivity", page 52
	[Configuration]	System configurations.
	[Calibration and Defaults]	Calibrate the screen.
		Set time and date.
		Reset UV lamp.
		Calibrate solvent level sensors. See Chapter 5.8 "Calibrating the solvent level sensor", page 27
		Calibrate the waste level sensor. See Chapter 5.12 "Calibrating the waste level sensor", page 29
		Set alarms
	[Manual control]	Maintenance actions. See Chapter 7.6 "Cleaning the instrument", page 77 See Chapter 7.7 "Cleaning the solid loader", page 78 See Chapter 7.8 "Removing solvent from an used cartridge", page 78 See Chapter 8.8 "Resetting the Fraction collector arm", page 89
	[NP<>RP]	Change back and forth between normal phase and reverse phase
	[Product Services] (C-810 C-815 C-850 only)	Override max. pressure limit for cartridges.
	[UV Baseline]	Adjust the baseline to zero during a run.
	[Language]	Select a language.
	[Service]	BUCHI service technicians only
[Help]	*[About]*	The display shows instrument details.
	[View Manual]	The display shows the Operation manual.

6.1.4 Conditions panel

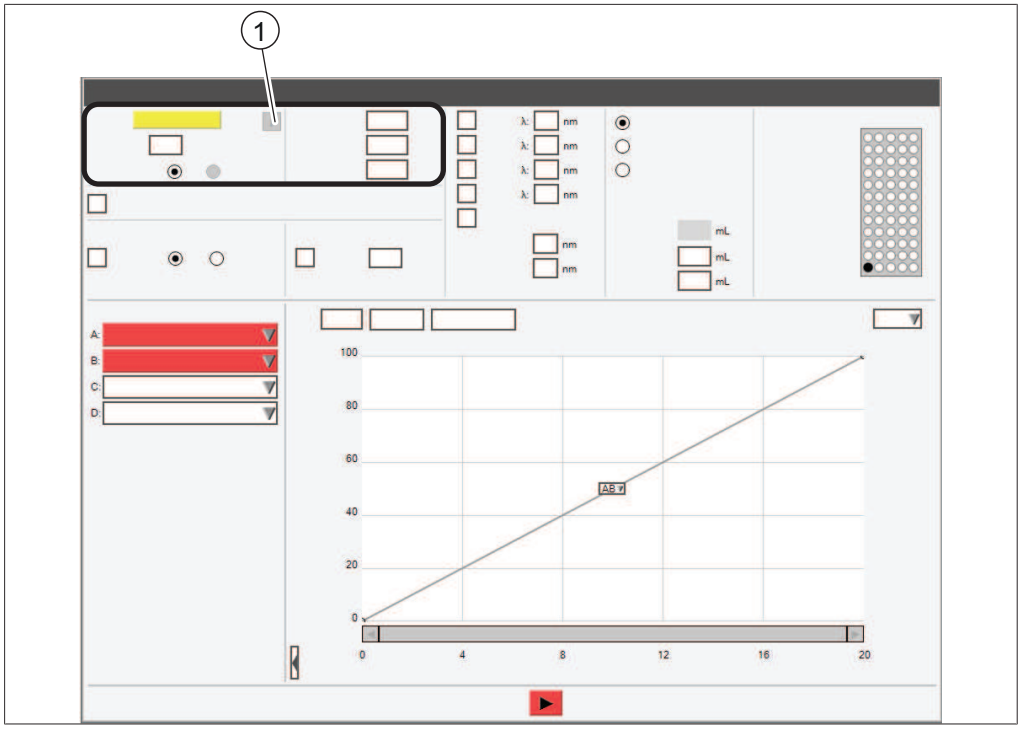

1 Information button
(Information about the selected column)

The conditions area contains the following settings:

Action	Option	Explanation
[Column] (Prep mode)	Enter value	Enter a name for the present cartridge.
[Column] (Flash mode)	Select column /automatic via RFID	Shows the name of the column installed in the instrument.
[Flow Rate]	Enter value	Edit the default flow rate.
[Duration Units]	Choice of the duration type	The following types are available: minutes / column volumes
[Equilibration]	Enter value	Indicates the period of time or number of column volumes that the mobile phase flows through the column before the sample is injected.
[Run Length]	Enter value	According to the current operation enter the time for the separation.
		According to the current operation enter the number of column volumes required for the separation.

Action	Option	Explanation
[Air Purge Time]	Enter value	Indicates the period of time that air is passed through the column after the separation to remove mobile phase

6.1.5 Collection panel

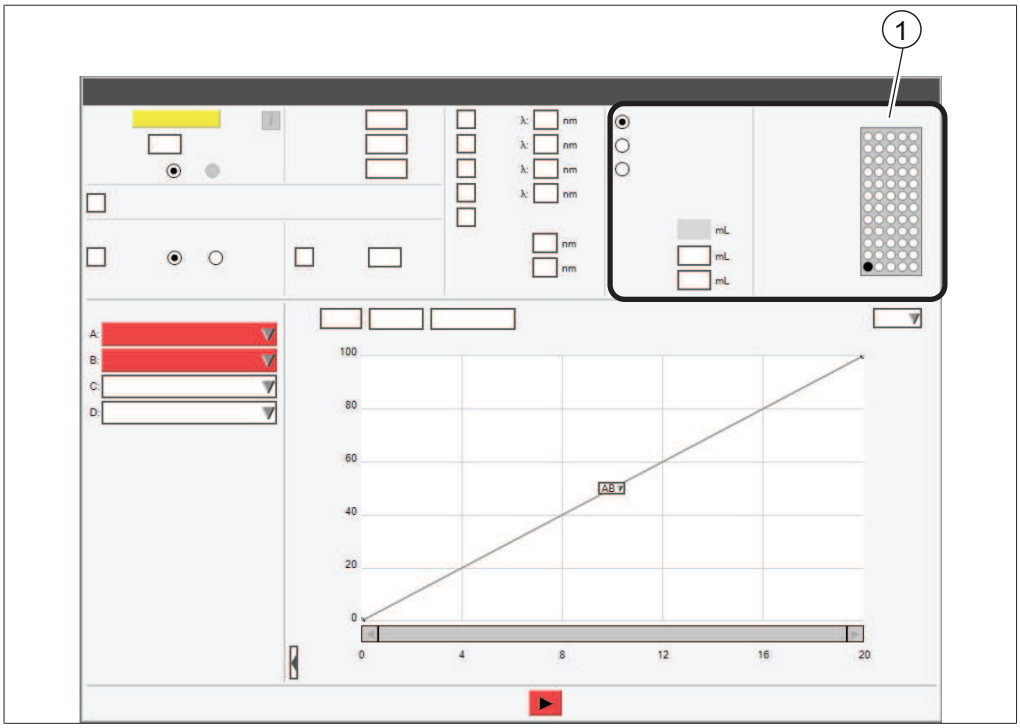

1 Tray number

The collection vial matrix corresponds to the trays. The trays are detected by the auto recognition. The estimated number of vials required for the separation is displayed below the solvent usage list in the lower left corner of the Setup window. The fraction collection area contains the following settings:

Action	Option	Explanation
Fraction collection options	Select value	The following options are available: *[Collect Peaks]* / *[Collect All]* / *[Collect None]*
[Per-Vial Volume]	View / Enter value	The following values are changeable: *[Peak]* / *[Non-Peaks]*

6.1.6 Gradient panel

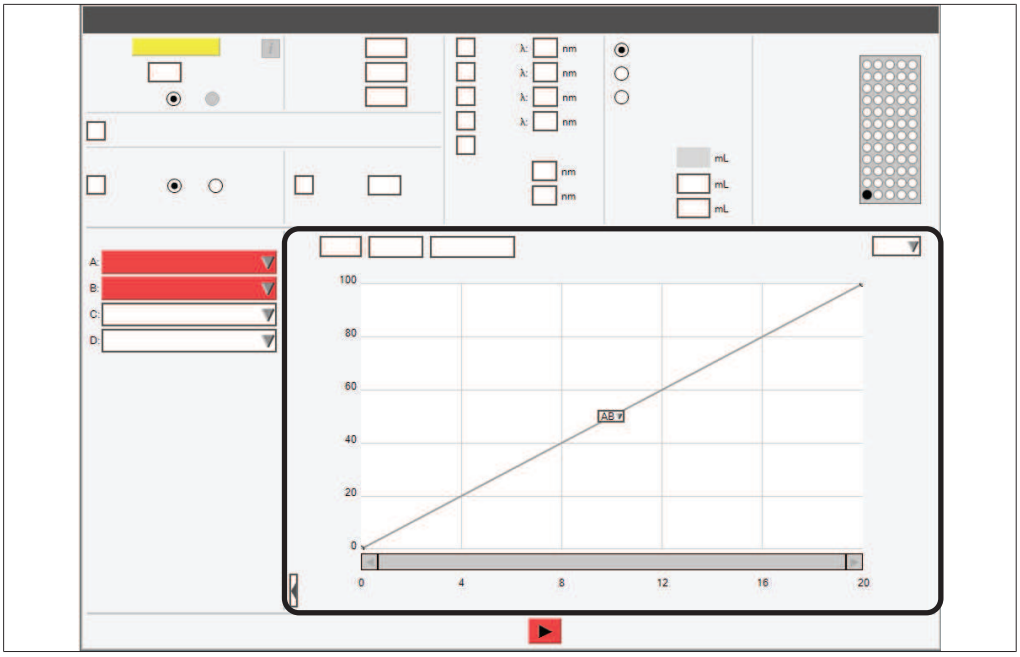

Edit the gradient and see separation details.

NOTE

According to the instrument status different options are available.

Action	Option	Explanation
[Table]	Create a gradient	See Chapter "Editing the gradient in tabular mode", page 46
[Navigator]	Finding out Flash separation conditions	See Chapter 10.3 "Finding out separation conditions with the navigator", page 97
[UV scan details]	View	Shows the following charts: • 3D (UV / Time/ Wavelength) • 2D (Time / Wavelength) • Absorption maxima • All scan maxima
[Zoom]	Function	Zoom the graph.
[Options]	Select values	Graph options.
[Edit]	Select between the options	The graph is in edit mode. See Chapter "Editing the gradient in graphic mode", page 47
[View]		The graph is in view mode. (No changes possible)
[Zoom]		Zoom the graph.

Action	Option	Explanation
[Gradient hold]	Function	The gradient is held at the current solvent ratio.
		The gradient continues to the original end-point.
[Auto gradient hold]	Function	The gradient will be held every time the signal goes over the set threshold.

6.1.7 Run panel

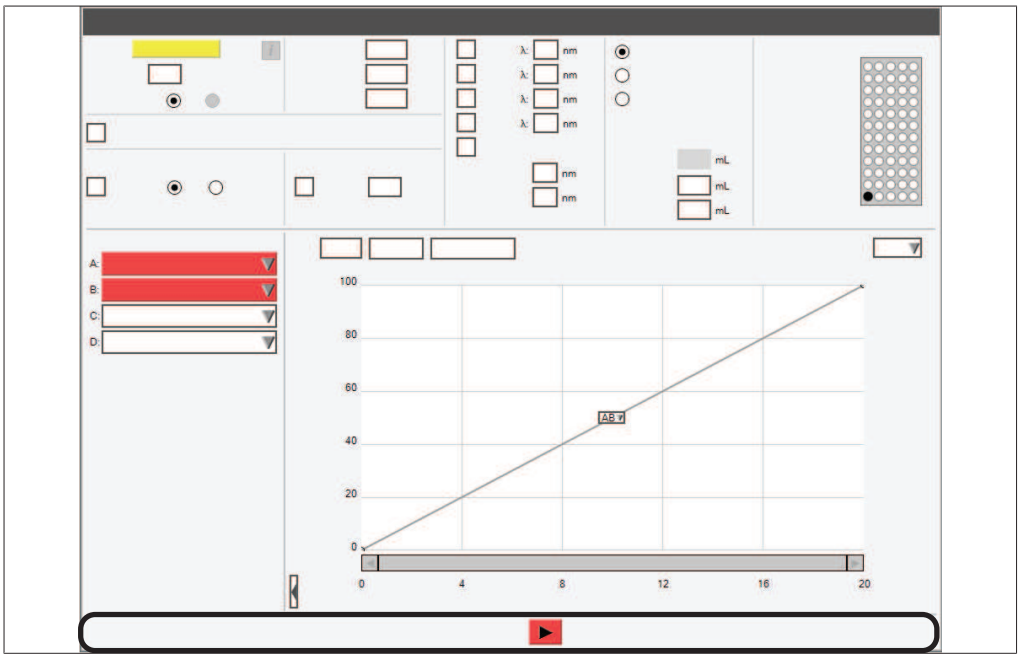

The run panel shows available functions according to the current operation.

Symbol	Description	Meaning
▶	*[Start]*	Is used to start the run or re-start the actual operation if the system has been paused.
■	*[Stop]*	Is used to terminate the operation of the system.
❚❚	*[Pause]*	Is used to stop the actual operation. If the system is paused due to an error, this button will change to yellow.
❯❯	*[Advance]*	Is used to advance to the next step during equilibration.

6.1.8 Solvent selection panel

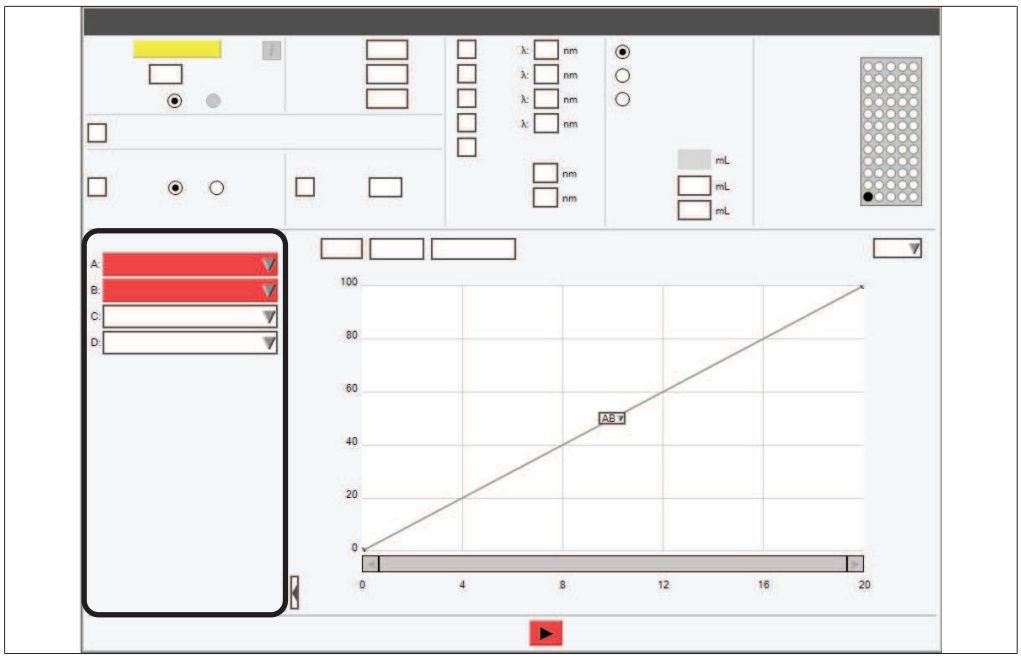

Select solvents for a separation. See Chapter 6.2.3 "Selecting a solvent", page 45

6.1.9 Detector selection panel

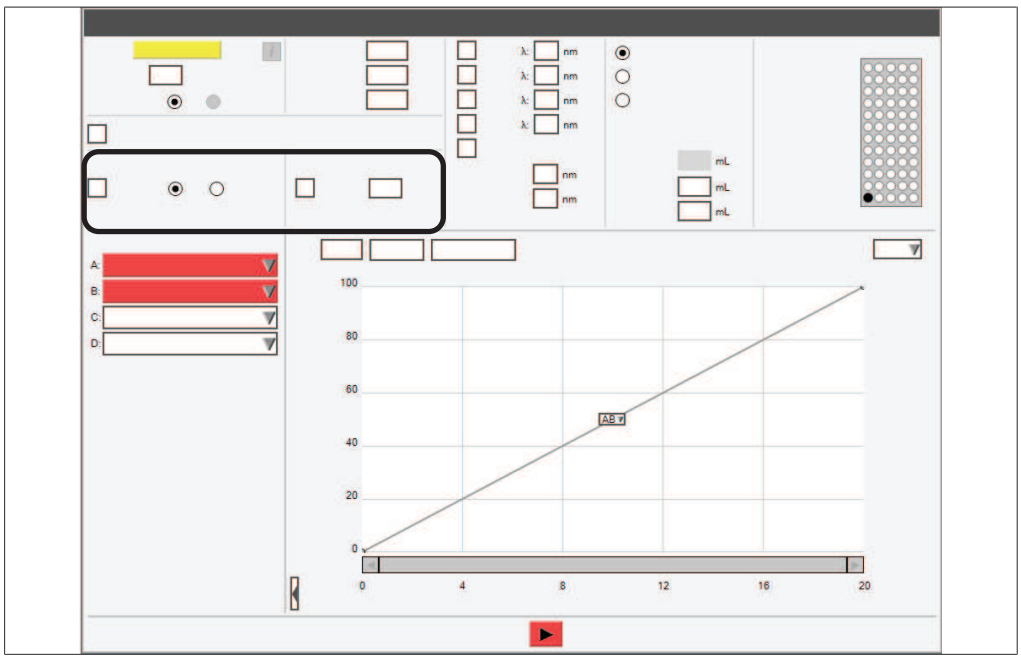

Action	Option	Explanation
[ELSD]	Enable / Disable Select value	Action enabled: Select between Low / High Enter values for threshold
		Action disabled: No selection

Action	Option	Explanation
[UV]	Enable / Disable Select value / Enter value	Action enabled: Low / High Enter values for threshold
		Action disabled: No selection
[Threshold Detection]	Enter value	The threshold defines the value above the fraction collector starts to collect fractions.

6.1.10 Slope detection panel

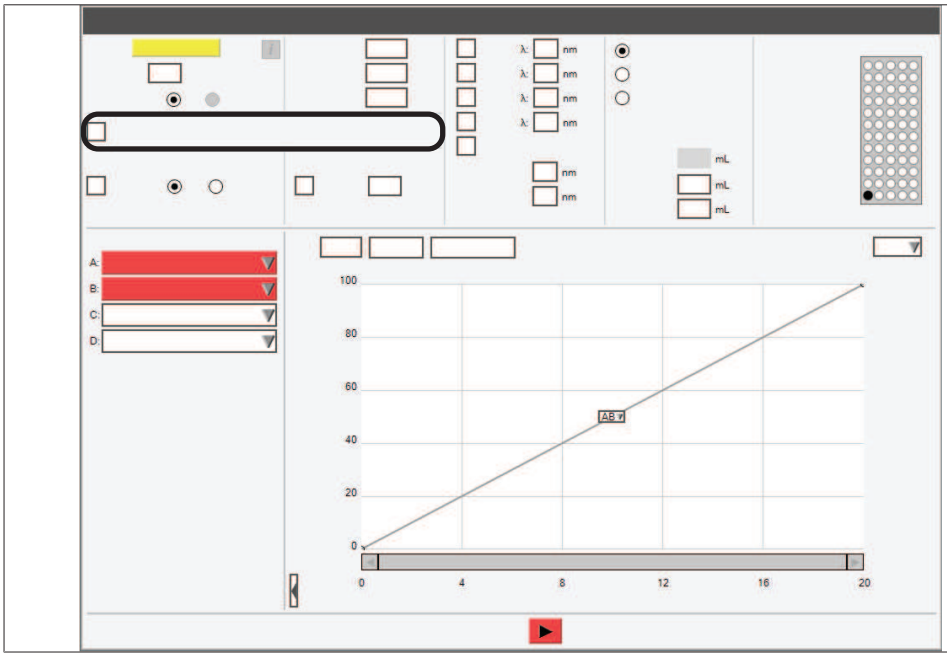

Action	Option	Explanation
[Slope detection]	Enable / Disable	Action enabled: Fraction collection triggered by slope
		Action disabled: No detection

6.2 Editing a method

6.2.1 Selecting a cartridge (Flash mode)

NOTE

The automatic reading of the cartridge information can only be done with specific BUCHI RFID tagged cartridges.

▶ The indication for recognizing the cartridge is a sound.

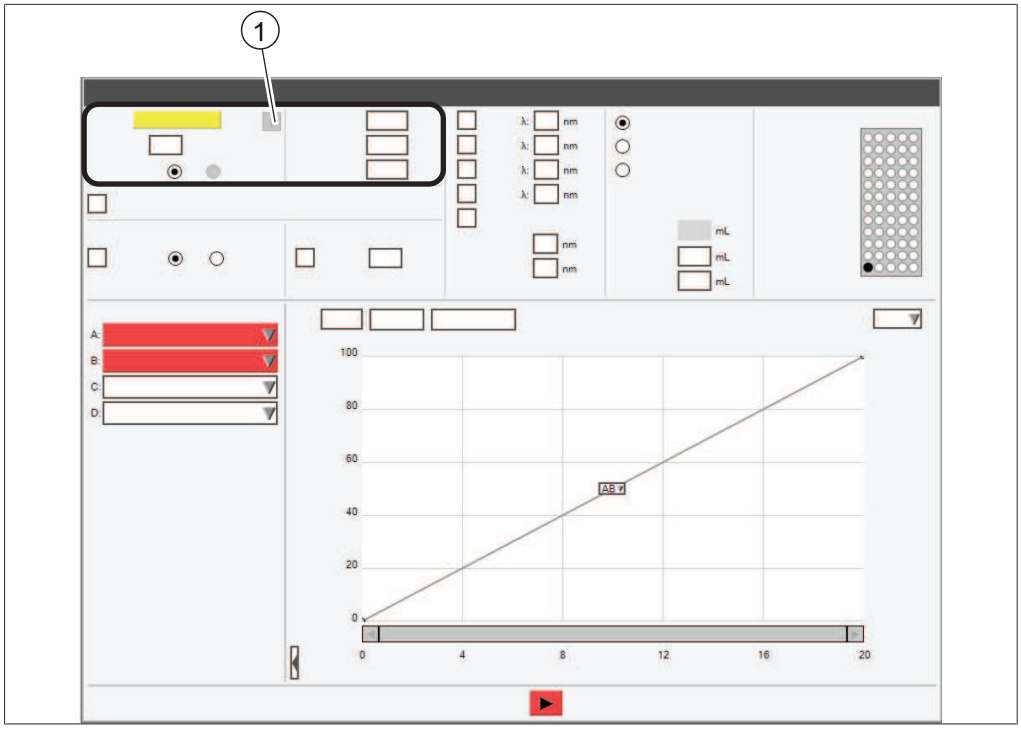

1 Information button
(Information about the selected column)

Navigation path

➔ Conditions panel

- ▶ Navigate to the *Conditions selection* panel according the navigation path.
- ▶ Tap the input box next to *[Column]*.
- ⇨ The display shows a menu with selectable cartridges.
- ▶ Select the cartridges you wish to use.

6.2.2 Selecting a column (Prep mode)

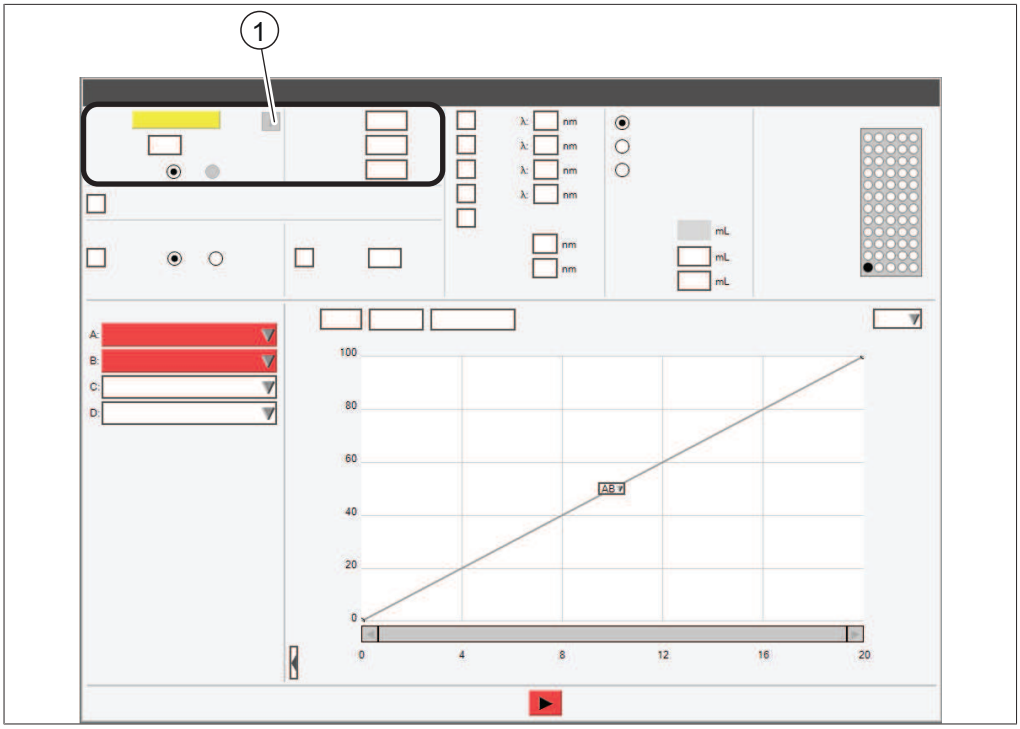

1 Information button
(Information about the selected column)

Navigation path

➔ Conditions panel

- ▶ Navigate to the *Conditions selection* panel according the navigation path.
- ▶ Tap the input box next to *[Column]*.
- ⇨ The display shows a dialog with an alphanumeric input box.
- ▶ Enter a name for the column.
- ▶ Tap the button *[OK]*.
- ▶ Tap the input box next to *[Flow rate]*.
- ⇨ The display shows a dialog box with a numeric input box.
- ▶ Enter a value for the flow rate.
- ▶ Tap the button *[OK]*.
- ▶ Tap the input ox next to *[Max. Pressure]*.
- ⇨ The display shows a dialog box with a numeric input box.
- ▶ Enter the maximum pressure for the column.
- ▶ Tap the button *[OK]*.

6.2.3 Selecting a solvent

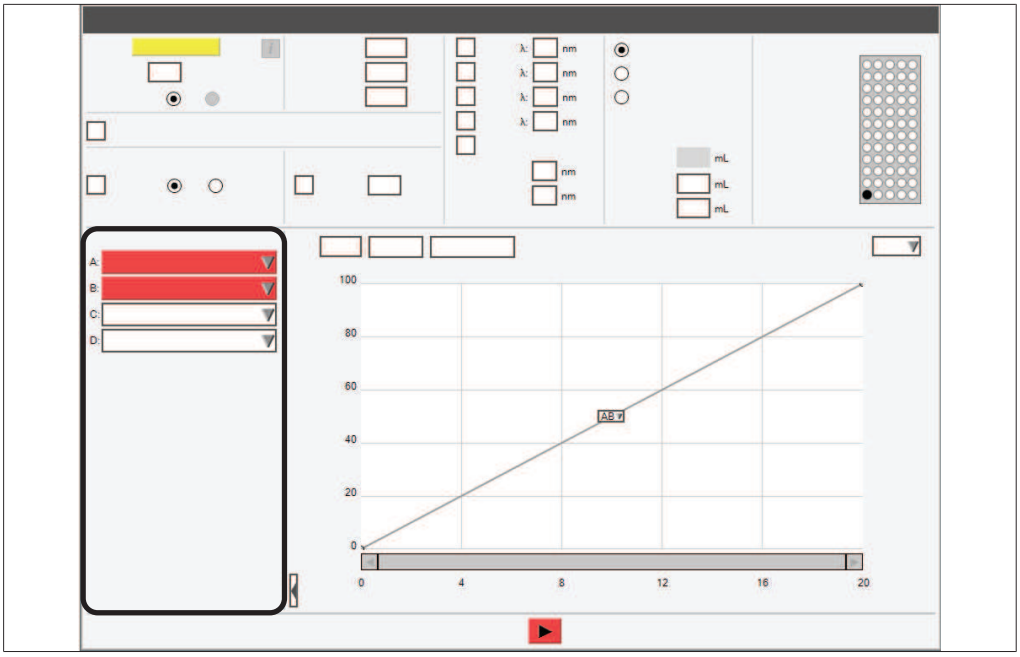

Navigation path

➔ Solvent selection panel

Precondition:

☑ The required solvents lines are connected and assigned. See Chapter 5.7 "Assigning solvent to solvent lines", page 26

▶ Navigate to the *Solvent selection* panel according the navigation path.

▶ Tap the drop-down list next to A: .

⇨ The display shows a drop-down list with the assigned solvents.

▶ Tap the required solvent.

⇨ The solvent is selected

⇨ The drop-down list closes.

▶ Select more solvents for the mobile phase according to your needs.

6.2.4 Editing the gradient

The composition of the mobile phase as a function of time can be indicated by entering the gradient. Four solvent lines can be used to generate a binary gradient. The solvents used to define the gradient can be altered during the separation.

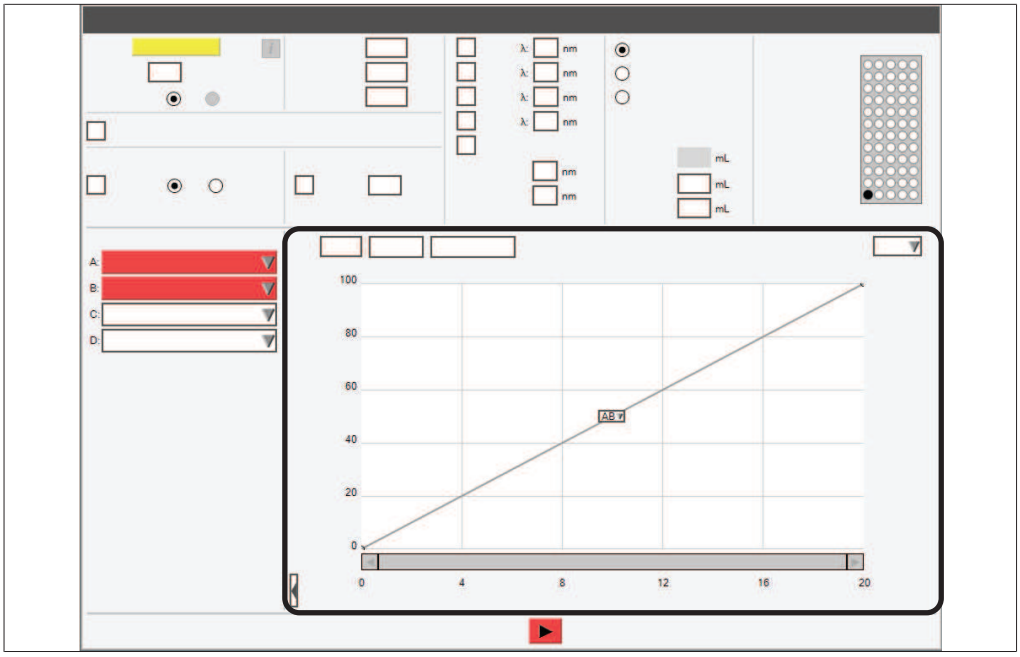

Editing the gradient in tabular mode

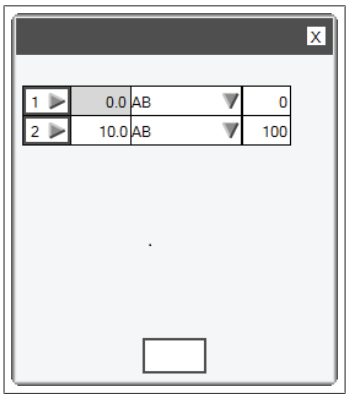

The following settings are available:

Action	Option	Explanation
[Min]	Enter value	Enter the time until the value in column *[% 2nd]* is reached.
[Solvents]	Select value	Select solvent line combinations.
[% 2nd]	Enter value	Enter the percentage rate for the second solvent.

Navigation path
➔ Gradient panel

- ▶ Navigate to the *Gradient* panel according the navigation path.
- ▶ Tap the button *[Table]*.
- ⇨ The display shows the dialog *Gradient Table*.
- ▶ Tap the cell for *[Min]*.
- ⇨ The display shows a dialog box with a numeric input box.

- ▶ Enter the time.
- ▶ Tap the button *[OK]*.
- ▶ Tap the cell for *[AB▼]*.
- ⇨ The display shows a drop-down list with solvent line combinations.
- ▶ Select the combination that you want to use.
- ▶ Tap the cell for *[% 2nd]*.
- ⇨ The display shows a dialog box with a numeric input box.
- ▶ Enter the percentage for the second solvent.
- ▶ Tap the button *[OK]*.
- ▶ Tap the button *[Close]*.
- ⇨ The gradient is saved
- ⇨ The dialog Gradient table closes
- ⇨ The *Gradient* panel shows the set gradient.

Add additional lines to the Gradient table

- ▶ Tap the number field (e.g. 1►).
- ⇨ The display shows a drop-down list with selectable actions.
- ▶ Select if the line should be added above or below the selected line.
- ⇨ A line is added.

Deleting lines from the Gradient table

- ▶ Tap the number field (e.g. 1►).
- ⇨ The display shows a drop-down list with selectable actions.
- ▶ Select delete.
- ⇨ The line is deleted.

Editing the gradient in graphic mode

Navigation path
➔ Gradient panel

- ▶ Navigate to the *Gradient* panel according the navigation path.
- ▶ Tap the button *[Edit]*.
- ⇨ The Display shows a drop-down list.
- ▶ Select *[Edit]*.

Add steps to the Gradient graphic

- ▶ Tap on the line at the time for which you want to edit the gradient and drag it to the desired %B, then release.

Deleting steps from the Gradient graphic

- ▶ To remove a step, drag the point to the baseline or to any gray area around the graph until a red X is visible, then release.

Change solvent combinations

▶ Solvent line combinations can be accessed by clicking on the AB▼ box to reveal a drop-down list.

6.2.5 Editing detector selection

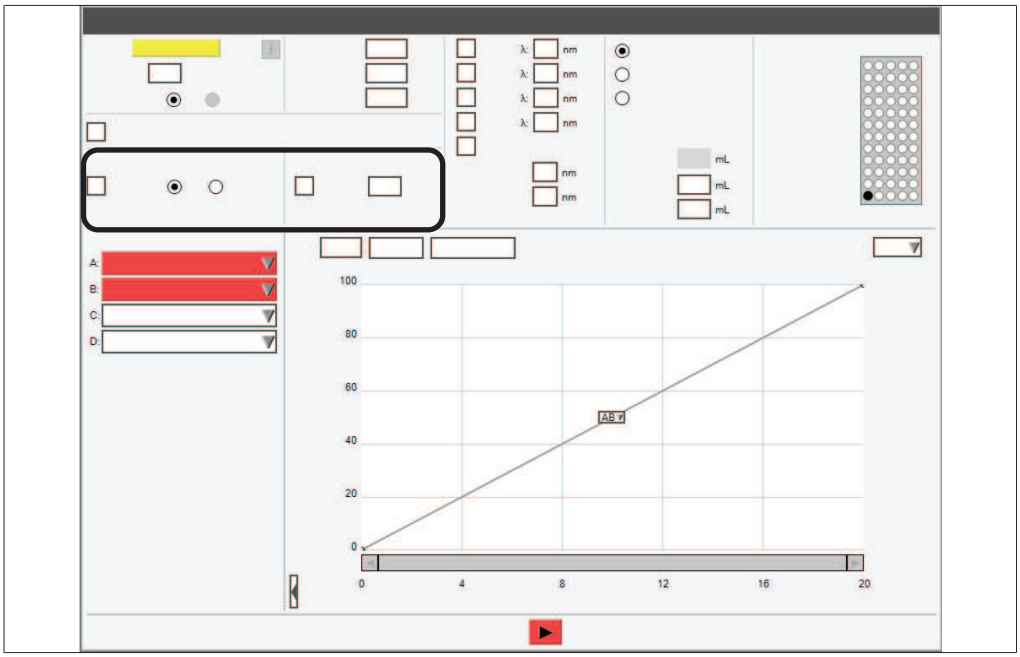

Navigation path

➔ Detector selection panel

▶ Navigate to the *Detector selection* panel according the navigation path.

▶ Activate checkbox for the detector you wish to use.

⇨ The detector is activated.

6.2.6 Editing the wavelength for the UV detector

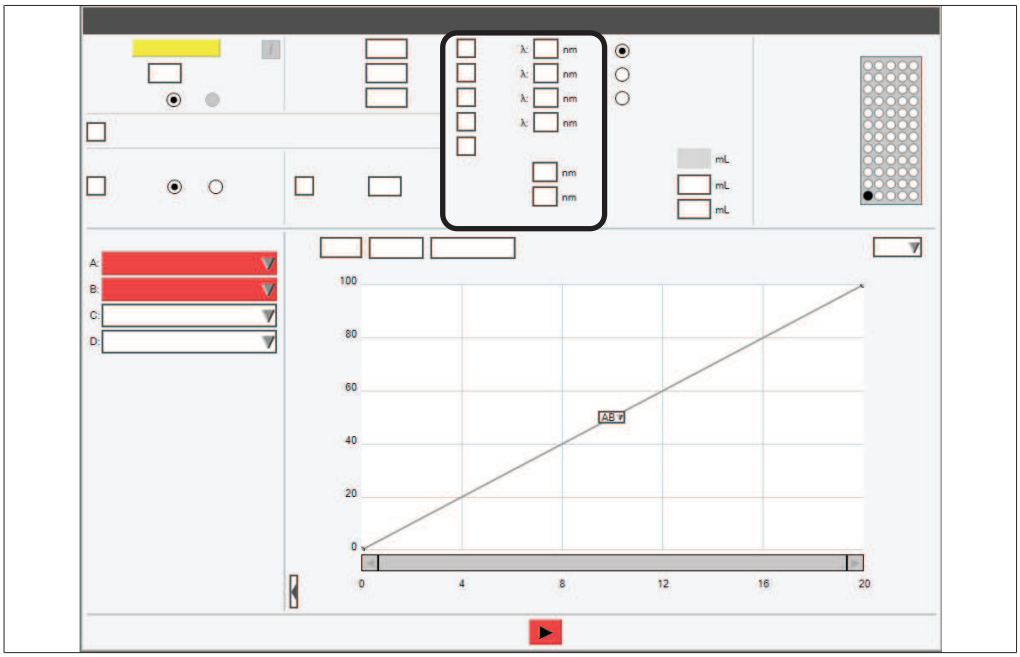

Status Checkbox	Explanation	Explanation
☑	On	The instrument collects fractions.
■	Monitoring	The instrument records the data from the UV detector but does not collect the fractions.
☐	Off	The instrument does not record data from the UV detector and does not collect fractions.

Navigation path

➔ Wavelength selection panel

Precondition:

☑ The UV detector is selected.

- ▶ Navigate to the *Wavelength* panel according the navigation path.
- ▶ Activate the checkbock next to *[UV]*.
- ▶ Tap the input box next to *[UV]*.
- ⇨ The display shows a dialog box with a numeric input box.
- ▶ Enter a value for the wavelength.
- ▶ Tap the button *[OK]*.
- ⇨ The dialog box closes.
- ⇨ The wavelength is saved.

6.2.7 Editing the fraction collection criteria

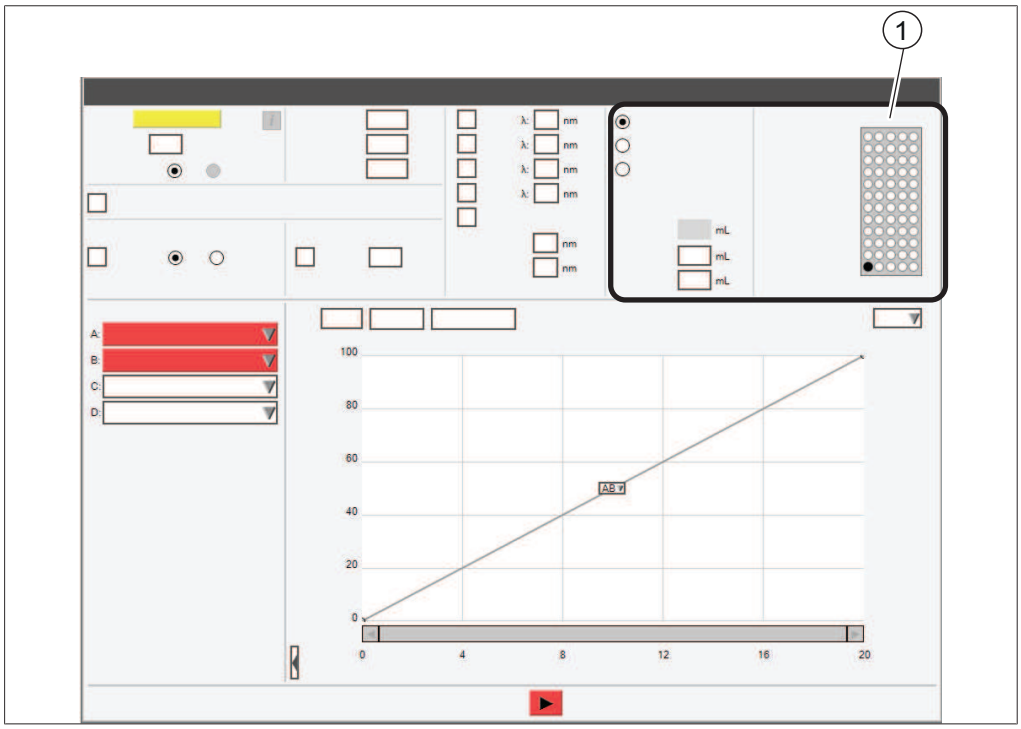

1 Identifier

The following fraction collection criteria are available:

Criteria	Meaning
[Collect Peaks]	The instrument collects fractions if one detector signal is above the set threshold.
[Collect All]	The instrument collects all the fractions regardless of detection signals.
[Collect None]	The instrument collects no fractions.

NOTE

[Peak] and *[Non-Peaks]* default is the maximum volume of the vial.

Navigation path
➔ Collection panel

- ▶ Tap the radio button next to criteria you wish to use.
- ⇨ The criteria is selected.
- ▶ Tap the input box next to *[Peak]*.
- ⇨ The display shows a dialog box with a numeric input box.
- ▶ Enter a the volume you wish to collect.
- ▶ Tap the button *[OK]*.
- ⇨ The dialog box closes.
- ⇨ The value for the volume is saved.
- ▶ Tap the input box next to *[Non-Peaks]*.
- ⇨ The display shows a dialog box with a numeric input box.
- ▶ Enter the volume you wish to collect.
- ▶ Tap the button *[OK]*.
- ⇨ The dialog box closes.

6.2.8 Editing the fraction collection time

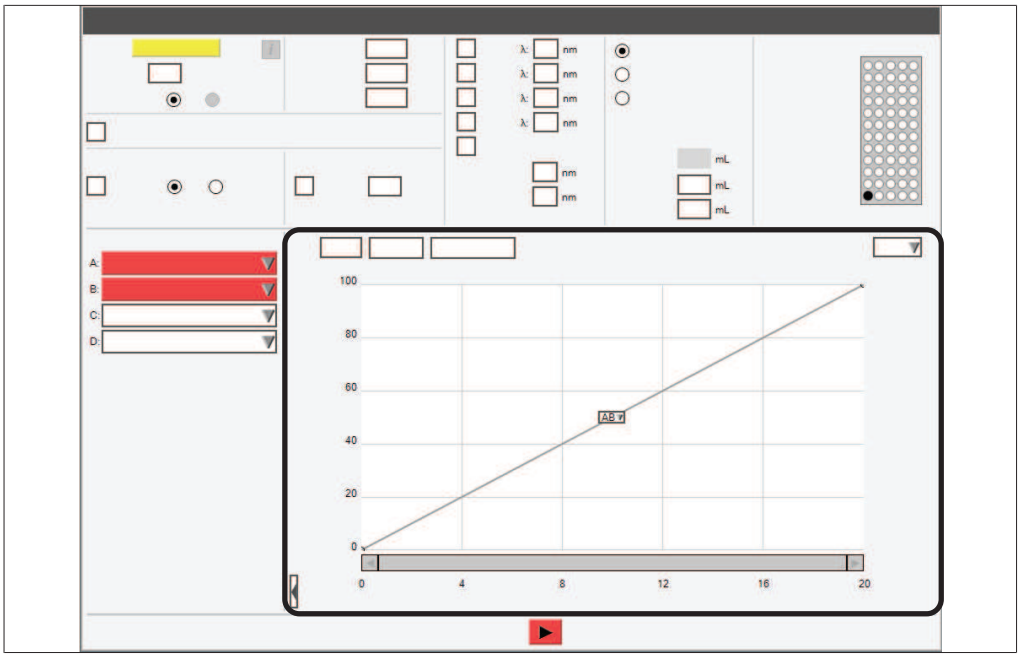

Program Collect allows to turn off fraction collection for a specific time.
The fraction collector defaults to collect the full run length unless the values from Program Collect override the collection.

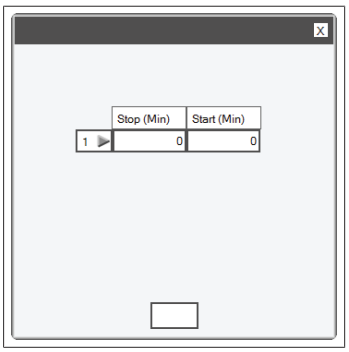

Navigation path

➔ Gradient panel

- ▶ Navigate to the *Gradient* panel according the navigation path.
- ▶ Tap the button *[Program collect]*.
- ⇨ The display shows the dialog *Program collect*.
- ▶ Tap the input box.
- ⇨ The display shows a dialog box with a numeric input box.
- ▶ Enter the time.
- ▶ Tap the button *[OK]*.
- ⇨ The time is saved.
- ⇨ The dialog box closes.

Add additional lines to the program collection

- ▶ Tap the number field (1▶).
- ⇨ The display shows a drop-down list with selectable actions.
- ▶ Select if the line should be added above or below the selected line.
- ⇨ A line is added.

Deleting lines from the program collection

- ▶ Tap the number field (1▶).
- ⇨ The display shows a drop-down list with selectable actions.
- ▶ Select delete.
- ⇨ The line is deleted.

6.2.9 Editing the vapor sensor sensitivity

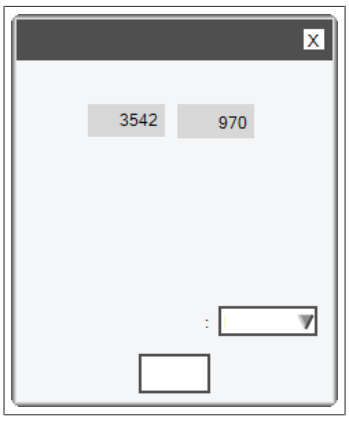

The vapor sensor detects solvent concentration in the ambient air.
The following sensitivity limits are available:

Sensitivity	Meaning
High	Used for non-volatile solvents
Medium	Compromise between the low and high setting
Low	Used for volatile or semi-volatile solvents
Off	The vapor sensor is off

Navigation path

➔ Tools ➔ Vapor Sensor and Limits

▶ Navigate to the *Vapor Sensors* dialog according to the navigation path.

⇨ The display shows the dialog box *Vapor Sensors*.

▶ Tap the drop-down list next *[Vapor alarm sensitivity]*.
▶ Select the sensitivity value you wish to use.
▶ Tap the button *[Close]*.

⇨ The dialog box closes.

6.2.10 Saving a method

Navigation path

➔ File ➔ Save Method as

▶ Navigate to the *Save Method as* dialog according to the navigation path.

⇨ The display shows the dialog box *Save Method as*.

▶ Tap the input box *[Enter method name]*.

⇨ The display shows a dialog with an alphanumeric input box.

▶ Enter the name of the method.

▶ Tap the button *[OK]*.

⇨ The dialog box closes.

▶ Tap the button *[OK]*.

⇨ The method is saved.

⇨ The dialog box closes.

6.3 Editing a solvent

6.3.1 Adding a new solvent

Navigation path

➔ Tools ➔ Solvent Definition

▶ Navigate to the *Solvent Definition* dialog according to the navigation path.

⇨ The display shows the dialog box *Solvent Definition*.

▶ Tap the button *[Add Solvent]*.

⇨ The display shows the dialog box *Solvent*.

▶ Tap the input box next to *[Name]*.

⇨ The display shows a dialog with an alphanumeric input box.

▶ Enter the name for the solvent.

▶ Tap the button *[OK]*.

⇨ The dialog box closes.

▶ Tap the input box next to *[Info]*.

⇨ The display shows a dialog with an alphanumeric input box.

▶ Enter information to the solvent according to your requirements.

▶ Tap the button *[OK]*.

⇨ The dialog box closes.

▶ Tap the button *[Verify Solvents]*.

⇨ The display shows the dialog box *Solvent Verification*.

- ▶ Select solvent group for the defined solvent.
- ▶ Tap the button *[OK]*.
- ⇨ The dialog box closes.
- ⇨ The solvent is added.
- ▶ Tap the button *[Close]*.
- ⇨ The dialog box *Solvent Definition* closes.

6.3.2 Deleting a solvent

Navigation path

➔ Tools ➔ Solvent Definition

- ▶ Navigate to the *Solvent Definition* dialog according to the navigation path.
- ⇨ The display shows the dialog box *Solvent Definition*.
- ▶ Select the solvent you wish to delete.
- ▶ Tap the button *[Delete Solvent]*.
- ▶ Answer the secure question with *[Yes]*.
- ⇨ The solvent is deleted.

6.4 Tasks during a separation

6.4.1 Introducing a sample into the prep system

- ▶ Connect the syringe at the sample loop port.

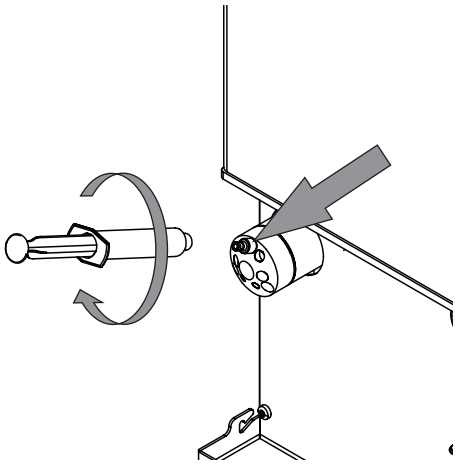

▶ Press the plunger.

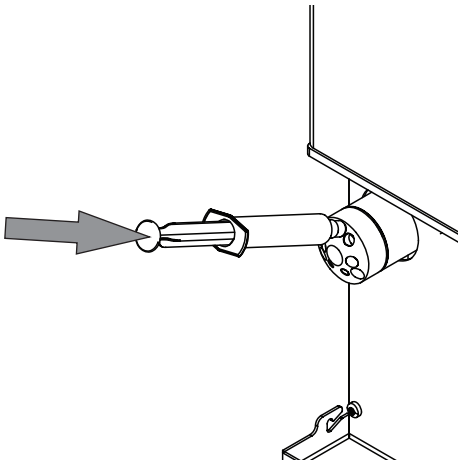

▶ Wait until the run starts.

▶ Disconnect the syringe at the inert loop port.

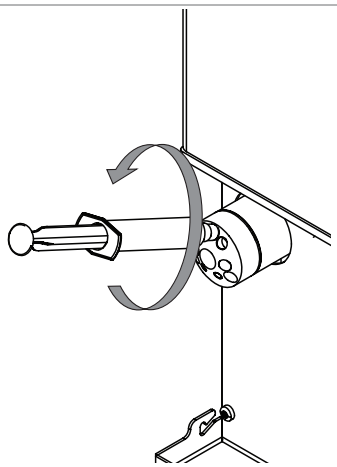

6.4.2 Injecting a sample into the flash system

Injecting a sample into the flash system at the luer port

⚠ CAUTION

Not removed syringe after injection.

A not removed syringe after injection can lead to spill of solvent and injuries.

▶ Remove the syringe after injection.

▶ Connect the syringe at the luer port.

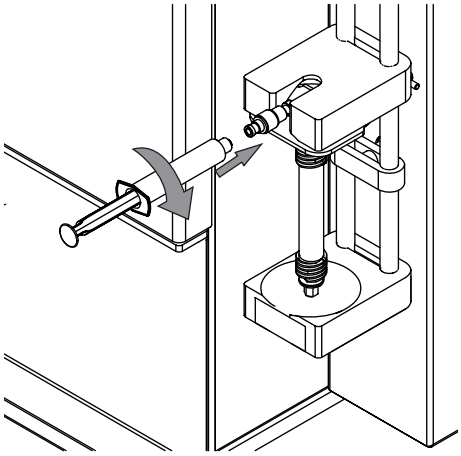

▶ Press the plunger.

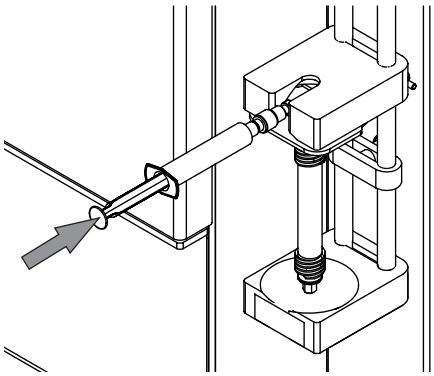

▶ Disconnect the syringe at the luer port.

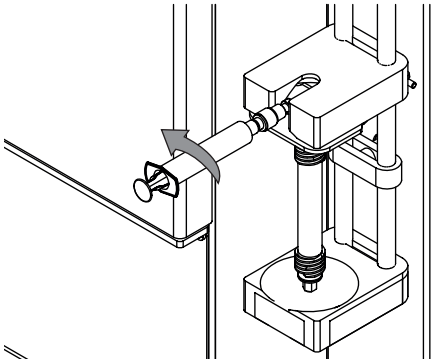

Injecting a sample into the flash system with a solid loader

NOTE

Removing is done in reverse sequence.

▶ Loosen the solvent line on the top of the cartridge holder.

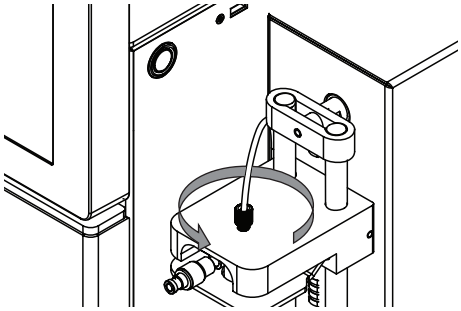

▶ Attach the solid loader to the cartridge holder.

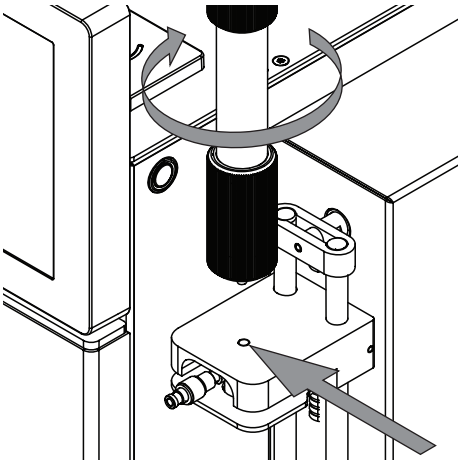

▶ Attach the solvent line to the solid loader.

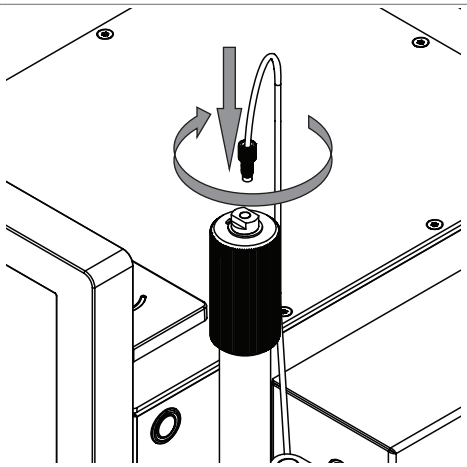

6.4.3 Installing and removing a cartridge

NOTE

Removing is done in reverse sequence.

NOTE

Instead of a cartridge a bypass can be installed.

NOTE

The automatic reading of the cartridge information can only be done with specific BUCHI RFID tagged cartridges.

▶ The indication for recognizing the cartridge is a sound.

▶ Hold the cartridge above the RFID reader.
▶ Wait until the instrument has taken over the cartridge data.

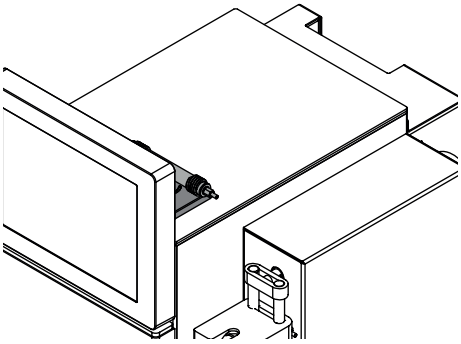

▶ Lift the clamping plate to release the lock mechanism and pull up the upper part of the cartridge holder.

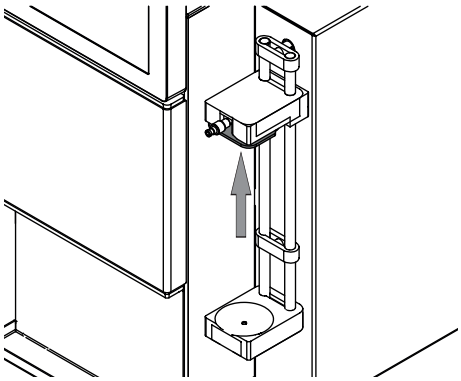

▶ Install the cartridge by pushing the cartridge inlet down into the luer fitting at the bottom plate.

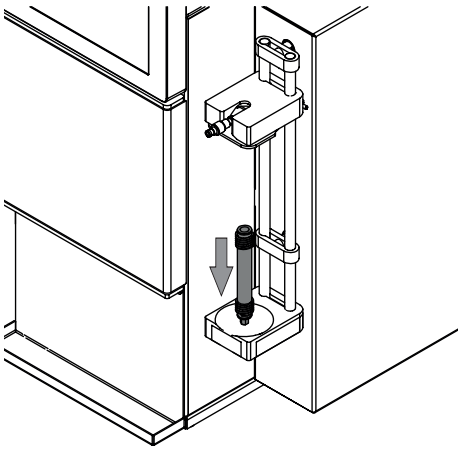

▶ Lower the upper part of the cartridge holder over the luer connection.
▶ Align it.
▶ Firmly press the arm in place to ensure a proper seal.

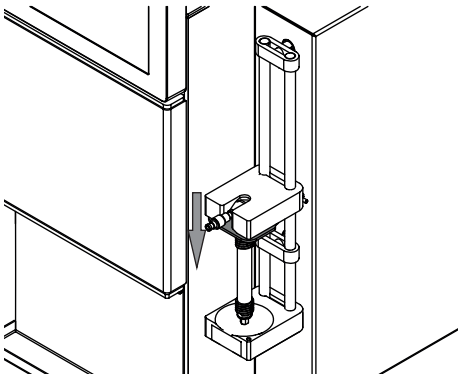

6.4.4 Installing and removing a column

NOTE

Removing is done in reverse sequence.

▶ Install the column in the bottom plate of the column holder.

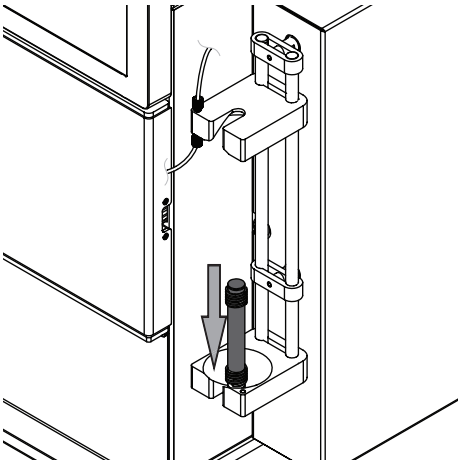

▶ Lower down the upper part of the column holder.

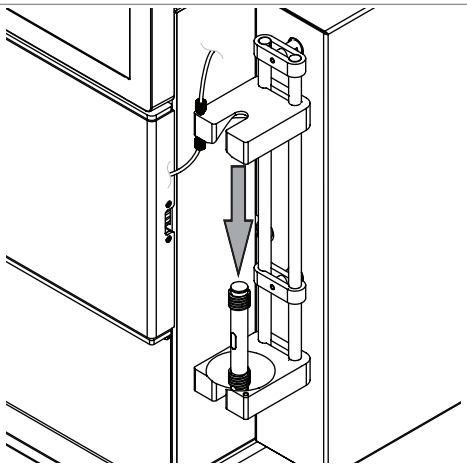

▶ Remove the tubing from the upper part of the column holder.

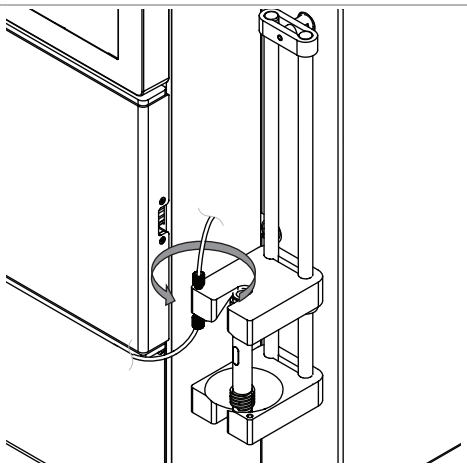

▶ Attach the tubing to the column.

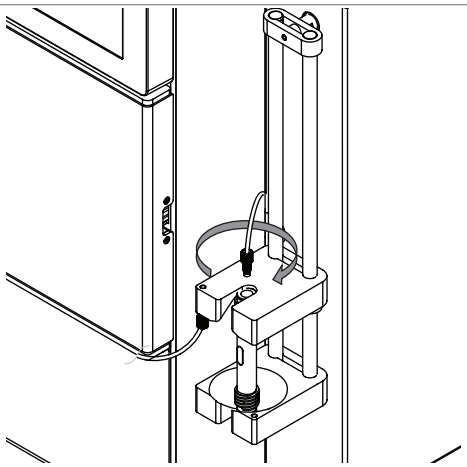

▶ Remove the lower tubing from the upper part of the column holder.

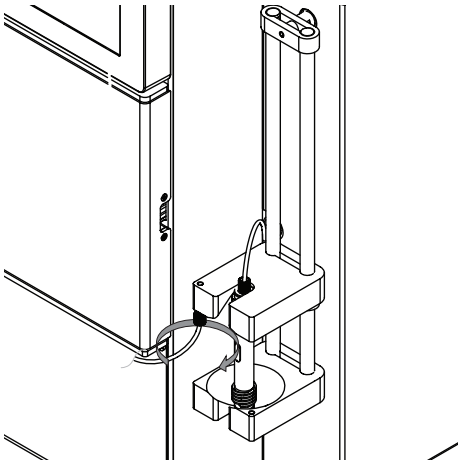

▶ Attach the tubing to the column.

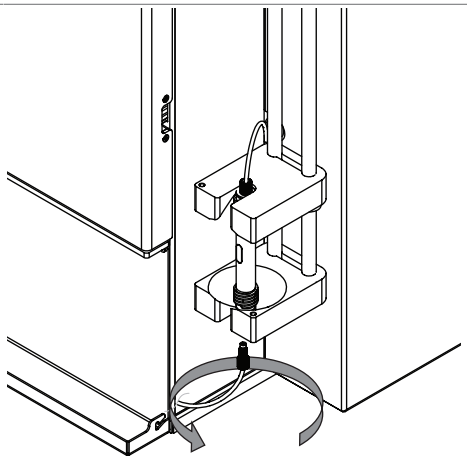

6.4.5 Inserting the fraction collection tray

NOTE

By default the first available tube on each tray is reserved for waste.

Changing the setting. See Chapter 6.4.7 "Selecting values on the dialog box Sample Loading", page 61

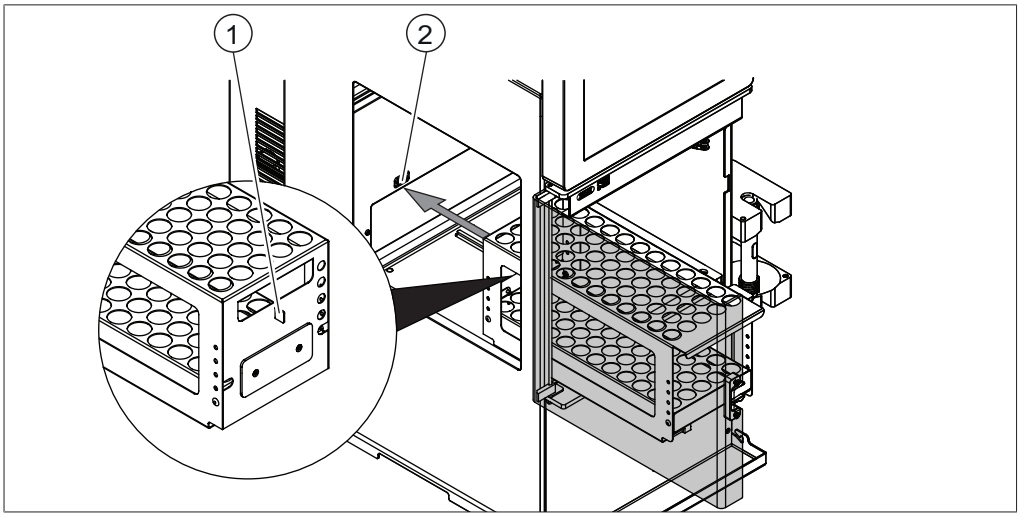

1 Tab

2 Optical sensor slot

▶ Place the collection tubes in the collection tray.

- ▶ Place the trays in the fraction collector bay.
- ▶ Make sure that the tab is in the optical sensor slot.

6.4.6 Selecting an existing method

Navigation path
➔ File ➔ Open Method

- ▶ Navigate to the *Open Method* dialog according to the navigation path.
- ⇨ The display shows the dialog box *Open Method*.
- ▶ Select the method you wish to use.
- ▶ The display highlights the selected method black.
- ▶ Tap the button *[OK]*.
- ⇨ The method is selected.
- ⇨ The dialog box closes.

6.4.7 Selecting values on the dialog box Sample Loading

The display shows the dialog box *Sample Loading* during the starting phase of a separation.
The following settings are possible:

Action	Explanation
[Lower flow rate for specified time after injection]	Reduce flow rate for a specified period, when the pressure increases significantly at the start of the run after sample injection.
[Flush 2nd solvent at the end of the run]	Automatically cleaning the system and column.
[Override Start Vial]	Select the start vial according to your needs.

6.5 Performing a Flash separation using a method

NOTE

Pure C-810 / C-815 / C-850 only

6.5.1 Preparing the instrument

Time required:	approx. 30 sec.

Precondition:

☑ All commissioning operations have been completed. See Chapter 5 "Installation", page 24

- ▶ Switch the ***On/Off*** master switch to On.
- ▶ Tap the ***On/Off*** switch.
- ⇨ The instrument is starting up.

6.5.2 Selecting the flash mode (Pure C-850 only)

Navigation path

➔ Mode

- ▶ Navigate to the *Mode* menu according to the navigation path.
- ▶ Select *[Flash]*.
- ⇨ The flash mode is selected.

6.5.3 Starting Flash separation using a method

Precondition:

- ☑ The instrument is prepared. See Chapter 6.5.1 "Preparing the instrument", page 61
- ☑ The required solvents are connected and assigned. See Chapter 5.7 "Assigning solvent to solvent lines", page 26
- ☑ The sample is prepared.
- ☑ The waste bottle is empty.

- ▶ Calibrate the solvent level sensor. See Chapter 5.8 "Calibrating the solvent level sensor", page 27
- ▶ Calibrate the waste level sensor. See Chapter 5.12 "Calibrating the waste level sensor", page 29
- ▶ Open the protection shield.
- ▶ Place the fraction collection trays inside the instrument. See Chapter 6.4.5 "Inserting the fraction collection tray", page 60
- ▶ Close the protection shield.
- ▶ Open an existing method. See Chapter 6.4.6 "Selecting an existing method", page 61
- ▶ Tap the button *[OK]*.
- ▶ Tap the button *[Start]* on the *Run* panel.
- ▶ According the requirements adjust the file name.
- ▶ Tap the button *[OK]*.
- ⇨ The display shows the dialog box *Sample Loading*.
- ▶ According the requirements adjust the settings. See Chapter 6.4.7 "Selecting values on the dialog box Sample Loading", page 61
- ▶ Follow the instructions on the display.
- ⇨ Installing the cartridge. See Chapter 6.4.3 "Installing and removing a cartridge", page 57
- ⇨ Introducing the sample into the system. See Chapter 6.4.2 "Injecting a sample into the flash system", page 55

6.5.4 Changings during a separation

NOTE

Parameters that can be edited are highlighted in green

Possibilities to edit the gradient during a separation:

- Change the gradient. See Chapter "Editing the gradient in graphic mode", page 47
- Hold the gradient. See Chapter 6.1.6 "Gradient panel", page 39
- Auto gradient hold. See Chapter 6.1.6 "Gradient panel", page 39

6.5.5 Ending a Flash separation

NOTE

The separation extends automatically by 5 minutes if the baseline at the end of the separation is not below the set threshold.

Precondition:

☑ The display shows the dialog box *Separation End*.

▶ According to the requirements extend the separation time by 5 minutes.

Precondition:

☑ The display shows the dialog box *Run completed*.

▶ Follow the instructions on the display.

⇨ Purging the instrument with air. See Chapter 7.8 "Removing solvent from an used cartridge", page 78

⇨ Removing the cartridge. See Chapter 6.4.3 "Installing and removing a cartridge", page 57

6.5.6 Shutting down the instrument

Navigation path
➔ File

Precondition:

☑ The separation process has ended.

▶ Purge the instrument with purging solvent. See Chapter 7.6 "Cleaning the instrument", page 77

▶ Navigate to the *[File]* menu via the navigation path.

▶ Tap the action *[Shut down]*.

▶ Confirm the secure question with *[Yes]*.

⇨ The instrument is shutting down.

6.6 Performing a Flash separation manually

NOTE

Pure C-810 / C-815 / C-850 only

6.6.1 Preparing the instrument

Time required:	approx. 30 sec.

Precondition:

☑ All commissioning operations have been completed. See Chapter 5 "Installation", page 24

▶ Switch the ***On/Off*** master switch to On.

▶ Tap the ***On/Off*** switch.

⇨ The instrument is starting up.

6.6.2 Selecting the flash mode (Pure C-850 only)

Navigation path

➔ Mode

▶ Navigate to the *Mode* menu according to the navigation path.

▶ Select *[Flash]*.

⇨ The flash mode is selected.

6.6.3 Starting Flash separation manually

Precondition:

☑ The instrument is prepared. See Chapter 6.6.1 "Preparing the instrument", page 63

☑ The required solvents are connected and assigned. See Chapter 5.7 "Assigning solvent to solvent lines", page 26

☑ The sample is prepared.

☑ The waste bottle is empty.

▶ Calibrate the solvent level sensor. See Chapter 5.8 "Calibrating the solvent level sensor", page 27

▶ Calibrate the waste level sensor. See Chapter 5.12 "Calibrating the waste level sensor", page 29

▶ Open the protection shield.

▶ Place the fraction collection trays inside the instrument. See Chapter 6.4.5 "Inserting the fraction collection tray", page 60

▶ Close the protection shield.

▶ Select a cartridge. See Chapter 6.2.1 "Selecting a cartridge (Flash mode)", page 42

▶ Tap the drop-down list next to A: on the *Solvent Selection* panel.

⇨ The display shows a drop-down list with the assigned solvents.

▶ Tap the required solvent.

⇨ The solvent is selected

⇨ The drop-down list closes.

▶ Select more solvents for the mobile phase according to your needs.

▶ Edit the gradient according to your needs. See Chapter 6.2.4 "Editing the gradient", page 45

▶ Select the sample collection in the *Collection* panel. See Chapter 6.2.7 "Editing the fraction collection criteria", page 49

▶ Select the collection criteria in the *Collection criteria* panel.

▶ Tap the button *[Start]* on the *Run* panel.

⇨ The display shows the dialog box *Sample Loading*.

▶ According the requirements adjust the settings. See Chapter 6.4.7 "Selecting values on the dialog box Sample Loading", page 61

▶ Follow the instructions on the display.

⇨ Installing the cartridge. See Chapter 6.4.3 "Installing and removing a cartridge", page 57

⇨ Introducing the sample into the system. See Chapter 6.4.2 "Injecting a sample into the flash system", page 55

6.6.4 Changings during a separation

NOTE

Parameters that can be edited are highlighted in green

Possibilities to edit the gradient during a separation:

- Change the gradient. See Chapter "Editing the gradient in graphic mode", page 47
- Hold the gradient. See Chapter 6.1.6 "Gradient panel", page 39
- Auto gradient hold. See Chapter 6.1.6 "Gradient panel", page 39

6.6.5 Ending a Flash separation

NOTE

The separation extends automatically by 5 minutes if the baseline at the end of the separation is not below the set threshold.

Precondition:

☑ The display shows the dialog box *Separation End*.

▶ According to the requirements extend the separation time by 5 minutes.

Precondition:

☑ The display shows the dialog box *Run completed*.

▶ Follow the instructions on the display.

⇨ Purging the instrument with air. See Chapter 7.8 "Removing solvent from an used cartridge", page 78

⇨ Removing the cartridge. See Chapter 6.4.3 "Installing and removing a cartridge", page 57

6.6.6 Shutting down the instrument

Navigation path

➔ File

Precondition:

☑ The separation process has ended.

▶ Purge the instrument with purging solvent. See Chapter 7.6 "Cleaning the instrument", page 77

▶ Navigate to the *[File]* menu via the navigation path.

▶ Tap the action *[Shut down]*.

▶ Confirm the secure question with *[Yes]*.

⇨ The instrument is shutting down.

6.7 Performing a Prep separation using a method

NOTE

Pure C-830 / C-835 / C-850 only

6.7.1 Preparing the instrument

Time required:	approx. 30 sec.

Precondition:

☑ All commissioning operations have been completed. See Chapter 5 "Installation", page 24

▶ Switch the ***On/Off*** master switch to On.

▶ Tap the ***On/Off*** switch.

⇨ The instrument is starting up.

6.7.2 Selecting the prep mode (Pure C-850 only)

Navigation path
➔ Mode

▶ Navigate to the *Mode* menu according to the navigation path.

▶ Select *[Preparative]*.

⇨ The prep mode is selected.

6.7.3 Starting a Prep separation using a method

Precondition:

☑ The instrument is prepared. See Chapter 6.7.1 "Preparing the instrument", page 66

☑ The required solvents are connected and assigned. See Chapter 5.7 "Assigning solvent to solvent lines", page 26

☑ The sample is prepared.

☑ The waste bottle is empty.

▶ Calibrate the solvent level sensor. See Chapter 5.8 "Calibrating the solvent level sensor", page 27

▶ Calibrate the waste level sensor. See Chapter 5.12 "Calibrating the waste level sensor", page 29

▶ Open the protection shield.

▶ Place the fraction collection trays inside the instrument. See Chapter 6.4.5 "Inserting the fraction collection tray", page 60

▶ Close the protection shield.

▶ Open an existing method. See Chapter 6.4.6 "Selecting an existing method", page 61

▶ Tap the button *[OK]*.

▶ Tap the button *[Start]* on the *Run* panel.

▶ According the requirements adjust the file name.

▶ Tap the button *[OK]*.

⇨ The display shows the dialog box *Sample Loading*.

- ▶ According the requirements adjust the settings. See Chapter 6.4.7 "Selecting values on the dialog box Sample Loading", page 61
- ▶ Follow the instructions on the display.
- ⇨ Installing the column. See Chapter 6.4.4 "Installing and removing a column", page 58
- ⇨ Introducing the sample into the system. See Chapter 6.4.1 "Introducing a sample into the prep system", page 54

6.7.4 Changings during a separation

NOTE

Parameters that can be edited are highlighted in green

Possibilities to edit the gradient during a separation:

- Change the gradient. See Chapter "Editing the gradient in graphic mode", page 47
- Hold the gradient. See Chapter 6.1.6 "Gradient panel", page 39
- Auto gradient hold. See Chapter 6.1.6 "Gradient panel", page 39

6.7.5 Ending a Prep separation

NOTE

The separation extends automatically by 5 minutes if the baseline at the end of the separation is not below the set threshold.

Precondition:

☑ The display shows the dialog box *Separation End*.

- ▶ According to the requirements extend the separation time by 5 minutes.

6.7.6 Shutting down the instrument

Navigation path

➔ File

Precondition:

☑ The separation process has ended.

- ▶ Removing the column. See Chapter 6.4.4 "Installing and removing a column", page 58
- ▶ Purge the instrument with purging solvent. See Chapter 7.6 "Cleaning the instrument", page 77
- ▶ Navigate to the *[File]* menu via the navigation path.
- ▶ Tap the action *[Shut down]*.
- ▶ Confirm the secure question with *[Yes]*.
- ⇨ The instrument is shutting down.

6.8 Performing a Prep separation manually

NOTE

Pure C-830 / C-835 / C-850 only

6.8.1 Preparing the instrument

Time required:	approx. 30 sec.

Precondition:

☑ All commissioning operations have been completed. See Chapter 5 "Installation", page 24

▶ Switch the ***On/Off*** master switch to On.

▶ Tap the ***On/Off*** switch.

⇨ The instrument is starting up.

6.8.2 Selecting the prep mode (Pure C-850 only)

Navigation path
➔ Mode

▶ Navigate to the *Mode* menu according to the navigation path.

▶ Select *[Preparative]*.

⇨ The prep mode is selected.

6.8.3 Starting a separation

Precondition:

☑ The instrument is prepared. See Chapter 6.8.1 "Preparing the instrument", page 68

☑ The required solvents are connected and assigned. See Chapter 5.7 "Assigning solvent to solvent lines", page 26

☑ The sample is prepared.

☑ The waste bottle is empty.

▶ Calibrate the solvent level sensor. See Chapter 5.8 "Calibrating the solvent level sensor", page 27

▶ Calibrate the waste level sensor. See Chapter 5.12 "Calibrating the waste level sensor", page 29

▶ Open the protection shield.

▶ Place the fraction collection trays inside the instrument. See Chapter 6.4.5 "Inserting the fraction collection tray", page 60

▶ Close the protection shield.

▶ Install a column. See Chapter 6.4.4 "Installing and removing a column", page 58

▶ Tap the drop-down list next to A: on the *Solvent Selection* panel.

⇨ The display shows a drop-down list with the assigned solvents.

▶ Tap the required solvent.

⇨ The solvent is selected

⇨ The drop-down list closes.

▶ Select more solvents for the mobile phase according to your needs.

▶ Edit the gradient according to your needs. See Chapter 6.2.4 "Editing the gradient", page 45

▶ Enter the required times in the *Conditions* panel.

- ▶ Select the sample collection in the *Collection* panel. See Chapter 6.2.7 "Editing the fraction collection criteria", page 49
- ▶ Select the collection criteria in the *Collection criteria* panel.
- ▶ Tap the button *[Start]* on the *Run* panel.
- ⇨ The display shows the dialog box *Sample Loading*.
- ⇨ The instrument starts the separation.
- ▶ According the requirements adjust the settings. See Chapter 6.4.7 "Selecting values on the dialog box Sample Loading", page 61
- ▶ Follow the instructions on the display.
- ⇨ Installing the column. See Chapter 6.4.4 "Installing and removing a column", page 58
- ⇨ Introducing the sample into the system. See Chapter 6.4.1 "Introducing a sample into the prep system", page 54

6.8.4 Changings during a separation

NOTE

Parameters that can be edited are highlighted in green

Possibilities to edit the gradient during a separation:

- Change the gradient. See Chapter "Editing the gradient in graphic mode", page 47
- Hold the gradient. See Chapter 6.1.6 "Gradient panel", page 39
- Auto gradient hold. See Chapter 6.1.6 "Gradient panel", page 39

6.8.5 Ending a Prep separation

NOTE

The separation extends automatically by 5 minutes if the baseline at the end of the separation is not below the set threshold.

Precondition:

☑ The display shows the dialog box *Separation End*.

- ▶ According to the requirements extend the separation time by 5 minutes.

6.8.6 Shutting down the instrument

Navigation path

➔ File

Precondition:

☑ The separation process has ended.

- ▶ Removing the column. See Chapter 6.4.4 "Installing and removing a column", page 58
- ▶ Purge the instrument with purging solvent. See Chapter 7.6 "Cleaning the instrument", page 77
- ▶ Navigate to the *[File]* menu via the navigation path.
- ▶ Tap the action *[Shut down]*.

▶ Confirm the secure question with *[Yes]*.

⇨ The instrument is shutting down.

6.9 Identifying fractions

6.9.1 Identifying fractions by peak

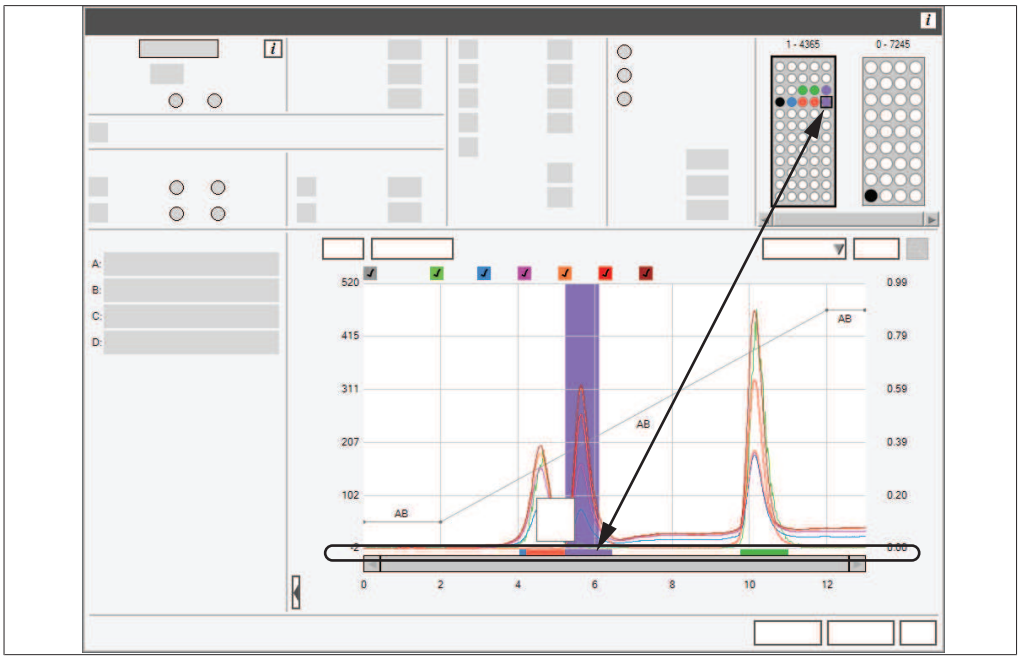

Fig. 9: Identifying fractions

Navigation path

➔ Gradient panel

Precondition:

☑ A separation is finished.

▶ Navigate to the *Gradient* panel according the navigation path.

▶ Tap the peak with the target value.

⇨ The *Collection* panel shows the corresponding vial.

6.9.2 Identifying fractions per vial

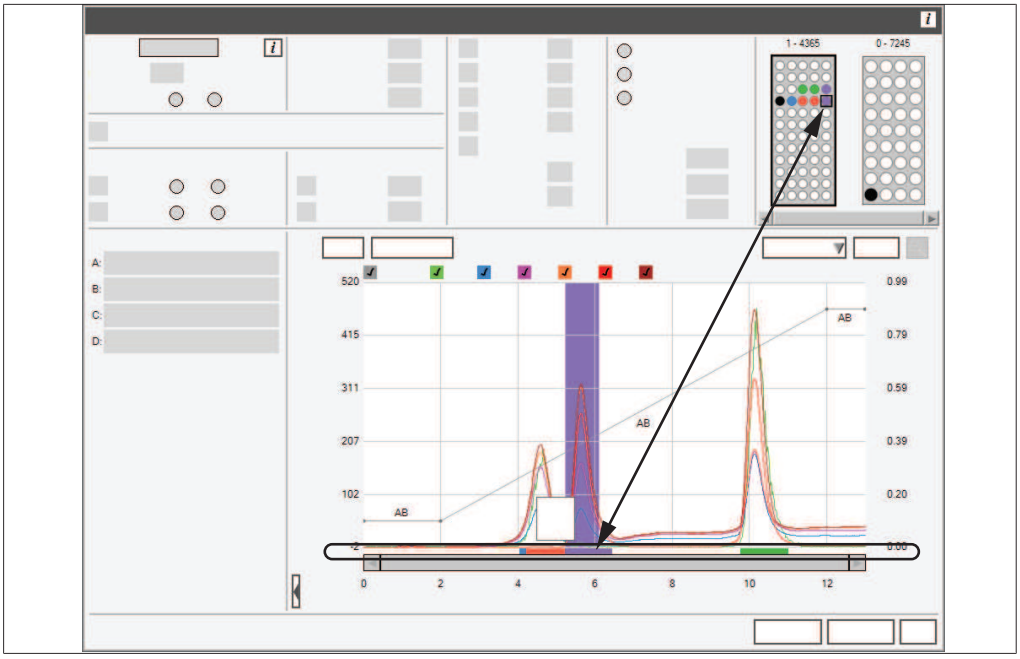

Fig. 10: Identifying fractions

Navigation path

➔ Collection panel

Precondition:

☑ A separation is finished.

▶ Navigate to the *Collection* panel according the navigation path.

▶ Tap the target vial.

⇨ The *Gradient* panel shows the corresponding peak.

6.10 Importing and exporting data

6.10.1 Printing a run report

Navigation path

➔ File ➔ Print Run Report

Precondition:

☑ The instrument is in past run mode.

▶ Navigate to the *Print Run Report* dialog according to the navigation path.

⇨ The display shows the Windows® print dialog.

▶ Select your printer.

▶ Tap the button *[OK]*.

⇨ The report is printed.

6.10.2 Sending data to USB

Navigation path

➔ Run panel

Precondition:

☑ The instrument is in past run mode.

▶ Connect a USB storage device to the instrument.

▶ Navigate to the *Run* panel according the navigation path.

▶ Tap the button *[Data to USB]*.

⇨ The instrument saves an Excel file to the USB storage device.

▶ Confirm the complete message.

⇨ The data is stored.

6.10.3 Sending PDF to USB

Navigation path

➔ Run panel

Precondition:

☑ The instrument is in past run mode.

▶ Connect a USB storage device to the instrument.

▶ Navigate to the *Run* panel according the navigation path.

▶ Tap the button *[PDF to USB]*.

⇨ The instrument saves a PDF file to the USB storage device.

▶ Confirm the complete message.

⇨ The data is saved.

7 Cleaning and servicing

NOTE

Users may only carry out the servicing and cleaning operations described in this section.

Any servicing and repair work which involves opening up the casing may only be carried out by BUCHI service technicians.

▶ Use only genuine BUCHI consumables and spare parts in order to ensure correct operation of the device and preserve the warranty.

7.1 Regular maintenance work

Component	Action	Frequency
Pumps and valves	▶ Purge the instrument with air. See Chapter 7.8 "Removing solvent from an used cartridge", page 78 ▶ Purge the instrument with purging solvent. See Chapter 7.6 "Cleaning the instrument", page 77	Daily
Tubing	▶ Check for leaks. If a leak is observed, resolve the issue before continuing.	Daily
Fittings	▶ Inspect fittings; if solid material is deposited on a fitting, clean and tighten (replace) the fitting before continuing.	Daily
Drain lines	▶ Check all drain lines to ensure that liquid can flow through them to the waste container	Daily
Waste bottle	▶ Empty the waste bottle	Daily
Filters	▶ Check the filters in the solvent bottles and clean if necessary.	Weekly
Fittings	▶ Check and if necessary tighten the fitting that secures the tubing from the mobile phase reservoir manifold to the inlet check valve housing	Weekly
Data	▶ Perform a data backup	Weekly
Casing	▶ Wipe down the casing with a damp cloth. ▶ If heavily soiled, use ethanol or a mild detergent.	Weekly
Warning symbols	▶ Check that the warning symbols on the instrument are legible. ▶ If they are dirty, clean them.	Weekly
Display	▶ Wipe down the display with a damp cloth.	Monthly

Component	Action	Frequency
Nebulizer	▶ Clean the nebulizer. See Chapter 7.4 "Cleaning the nebulizer", page 75	Monthly
Air filter	▶ Replace the air filter.	Yearly

7.2 Carrying out a data backup

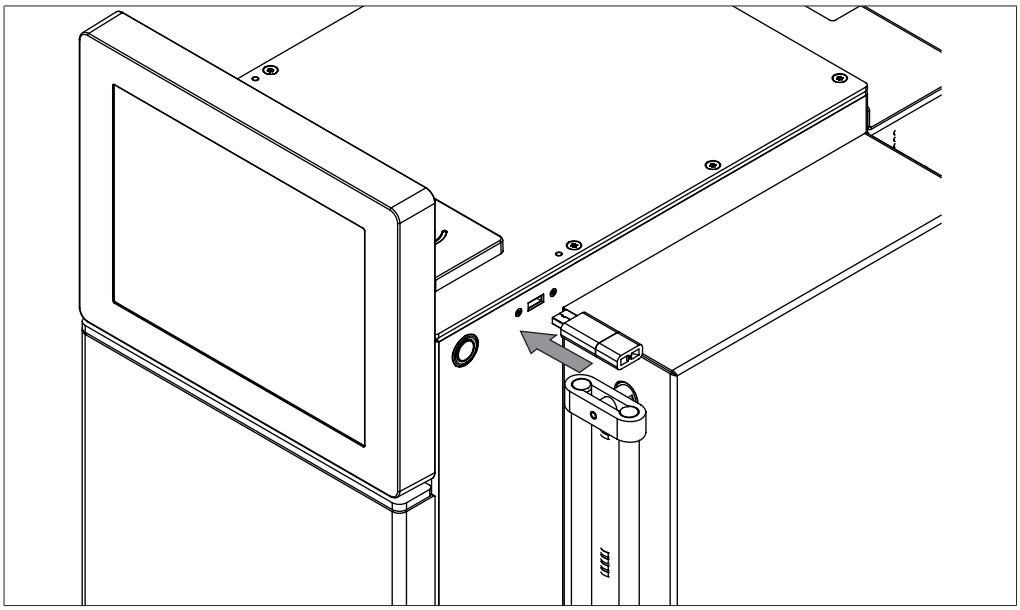

Navigation path

➔ File ➔ Exit

- ▶ Navigate to the *Exit* dialog according to the navigation path.
- ▶ Confirm the secure question.
- ⇨ The Pure software is shutting down.
- ⇨ The display shows a Windows® system.
- ▶ Connect a USB storage device to the instrument.
- ▶ Open the Windows® Explorer.
- ▶ Navigate to the data you wish to backup. See Chapter 10.2 "Folder locations", page 96
- ▶ Copy the needed data to the USB storage devices.

7.3 Calibrating the display

Navigation path

➔ Tools ➔ Calibration and Defaults

- ▶ Navigate to the *Calibration and Defaults* dialog according to the navigation path.
- ▶ Tap the button *[Calibrate]*.
- ▶ Follow the instructions on the display.

7.4 Cleaning the nebulizer

Materials Needed:

- HPLC-grade 50:50 methanol: water solution
- Sonication bath

▶ Switch the On/Off master switch to Off.

▶ Disconnect the liquid inlet line from the nebulizer.

▶ Disconnect the gas inlet from the nebulizer

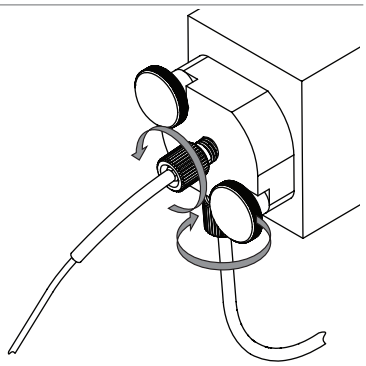

▶ Remove the knurled screws.

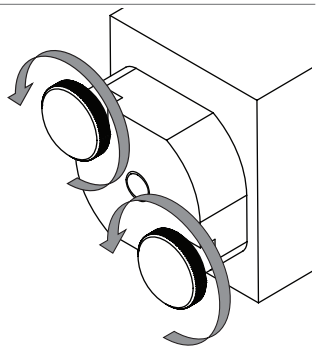

▶ Remove the nebulizer from the drift tube.

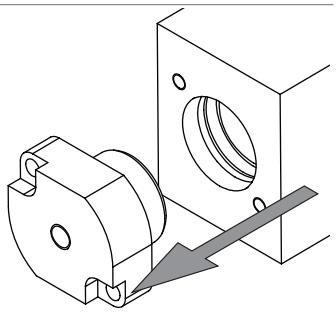

▶ Place the nebulizer in a beaker filled with 50:50 methanol: water solution.

▶ Sonicate the nebulizer in an ultrasonic bath for 10 minutes.

▶ If the nebulizer is still completely blocked, connect a high-pressure air line to the nebulizer inlet to help remove the blockage.

▶ If the nebulizer cannot be cleaned, replace the nebulizer.

▶ Replace the nebulizer wear band.

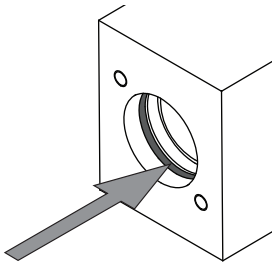

▶ Place the nebulizer to the thrift tube.

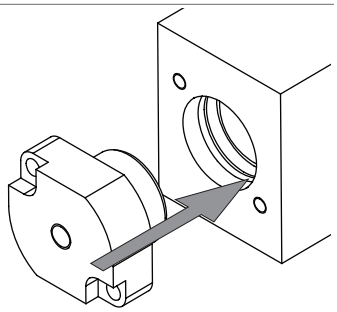

▶ Attach the knurled screws.

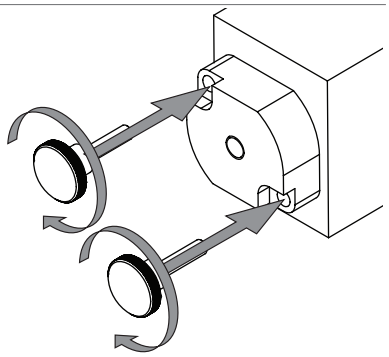

▶ Connect the liquid and gas inlet lines to the nebulizer.

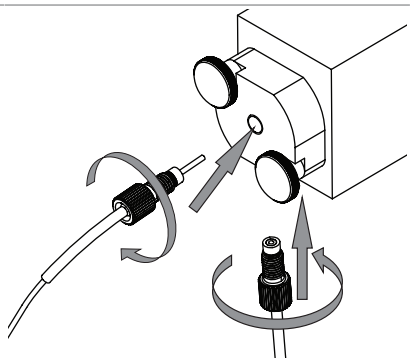

7.5 Cleaning the check valve

NOTE

Most check valve problems can be solved by pumping a strong solution of liquid laboratory grade detergent through the check valves at a rate of 20 mL/min for one hour.

Pumping detergent through the check valves

Materials needed:

- Liquid Laboratory Detergent
- Isopropanol/Water (50/50) or Methanol/Water (50/50)

Navigation path

➔ Tools ➔ Manual Control ➔ Column Flushing...

Precondition:

☑ A bypass is installed. See Chapter 6.4.4 "Installing and removing a column", page 58

▶ Navigate to the *Column Flushing* dialog according to the navigation path.

Sonicate the check valve

Materials needed:

- Open-end wrench, ½”, 9/16" x 5/16"
- Torque wrench

▶ Switch the On/Off master switch to Off.
▶ Disconnect the mobile phase tubing from the inlet (bottom) of the pump head using the 9/16” open-end wrench.
▶ Disconnect the mobile phase outlet tubing from the top of the pump head using the 5/16” open end wrench.
▶ Remove both check valve housings from the pump head using the ½” open-end wrench.

⇨ The check valve capsule is accessible.

▶ Sonicating the check valve for 10 min in the appropriate solvent.
▶ Install the check valve.
▶ Install the check valve housings back into the pump head.
▶ Tighten the check valve housing to 75 inch pounds with the ½” torque wrench.

7.6 Cleaning the instrument

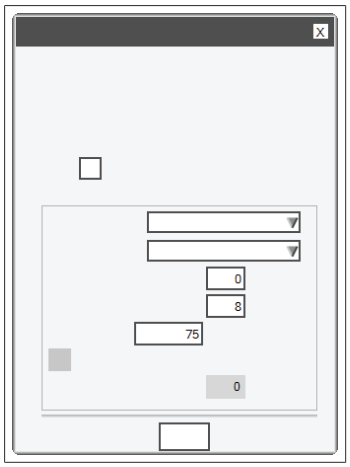

Navigation path

➔ Tools ➔ Manual Control ➔ Column Flushing...

Precondition:

☑ A purging solvent is assigned to the instrument. See Chapter 5.7 "Assigning solvent to solvent lines", page 26

▶ Install a bypass. See Chapter 6.4.4 "Installing and removing a column", page 58

- ▶ Navigate to the *Column Flushing* dialog according to the navigation path.
- ▶ Enter the required data according to your needs.

7.7 Cleaning the solid loader

Navigation path

➔ Tools ➔ Manual Control ➔ Solid Loader Flushing...

- ▶ Install a bypass. See Chapter 6.4.4 "Installing and removing a column", page 58
- ▶ Navigate to the *Solid Loader Flushing* dialog according to the navigation path.

7.8 Removing solvent from an used cartridge

Navigation path

➔ Tools ➔ Manual Control ➔ Air Purging

Precondition:
☑ The cartridge is installed.

- ▶ Navigate to the *Air Purging* dialog according to the navigation path.
- ▶ Enter the purging time according to your needs.
- ▶ Tap the button *[Column purge]*.

⇨ The instrument and the cartridges are cleaned.

8 Help with faults

8.1 Faults, possible causes and solutions (general)

Malfunction	Possible cause	Solution
The instrument does not power up	Power is not being supplied to the system	▶ Verify that the power cord is plugged in. ▶ Make sure that the voltage, amperage and frequency meet the instrument specifications. ▶ Make sure that both power switches are switched on. ▶ Verify that the fuse wire is not broken and fuses are correctly installed in the instrument.
System shuts down automatically	Major fluctuations in line power are present	▶ Connect system to a Uninterrupted Power Supply line.
The touch screen is not responsive	The touch screen is out of calibration	▶ Recalibrate the touch screen.

8.2 Faults, possible causes and solutions (cartridge)

Malfunction	Possible cause	Solution
Cartridge is not detected	RFID tag is not facing the RFID reader	▶ Turn cartridge so that RFID tag faces RFID reader.
	RFID tag is bad	▶ Use new cartridge.

8.3 Faults, possible causes and solutions (solvent delivery)

Malfunction	Possible cause	Solution
No solvent flow	Empty solvent bottle	▶ Refill the solvent bottle.
	Pump not primed	▶ Prime the pump. ▶ Remove the check valve and clean it by sonicating the check valve in IPA. ▶ If sonication does not work replace the check valve with a new check valve.
	Air bubbles in solvent line	▶ Prime the pump.
	Pump seals worn out	▶ Replace the pump seals.

Malfunction	Possible cause	Solution
Pulsation of pump	Open or close time of the inlet or outlet valves are not correct	▶ Rinse the pump module with high flowrate with ethanol or hot distilled water. ▶ Change check valves.
	Residues in solvent	
	Sealing abrasion outlet valve	
Inconsistent solvent flow	Loose fitting/air leak into the pump	▶ Find the loose fitting between mobile phase reservoir manifold and pump inlet fitting and tighten it up.
	Liquid leak/pump seals worn out	▶ Fix the leak/replace the pump seals.
	Pump head temperature reaches solvent boiling temperature, causing the pump to lose prime and stop flow (this is likely to occur when running methods with highly volatile solvents such as diethyl ether and methylene chloride)	▶ Premix the solvents to reduce solvent volatility. ▶ Place the highly volatile solvent bottle in an ice bath to eliminate boiling.
System pump pressure is higher than expected	Blocked solvent lines	▶ Find the blocked lines and replace it.
	Over-tightened fitting	▶ Loosen the fitting or replace it.
	Blocked columns or fluidic path	▶ Locate the component that caused the blockage, repair, or replace the component.
Leaks	Fitting connection not tight	▶ Find the loose fitting and tighten it up.
	Damaged solvent line	▶ Find the damaged solvent line and replace it.
Pump not running	Pump sensor cable becomes disconnected	▶ Locate the cable and reconnect to the pump sensor.
	Pump power cable becomes disconnected	▶ Locate the power cable and reconnect to the main board or to the pump.
Incorrect flow path	Incorrect fluidic connections to/from the mode switching valve	▶ Check/correct the fluidic connections.

8.4 Faults, possible causes and solutions (sample injection)

Malfunction	Possible cause	Solution
Leak around the injection port (Flash mode)	Dried sample or particulate matter interferes with syringe fitting	▶ Clean the injection port with appropriate solvent or remove particulate matter.
	Defective injection port (Luer fitting) adapter	▶ Replace the injection port.
Solid loader leaking	Loader hardware is not properly set up	▶ Verify that the loader hardware is set up correctly.
Leak around the prep injection valve/sample loop	Loose fitting	▶ Find the loose fitting and tighten it up.

8.5 Faults, possible causes and solutions (fraction collection)

Malfunction	Possible cause	Solution
Liquid not being collected in fraction tubes	Incorrect fraction collection settings	▶ Verify that fraction collection information is set properly.
Liquid not centered in fraction tube	Fraction collector is not calibrated	▶ Recalibrate the fraction collector.
Fraction collector (FC) arm does not move	Fraction collector arm did not home properly	▶ Reset the Fraction collector arm.
	Fraction collector arm motor is slipping	▶ Tighten the motor coupler.
	Fraction collector arm is obstructed	▶ Check for cable or burr in the fraction collector arm path and remove any obstruction.
Tray not detected	RFID tag is bad	▶ Put another tray into the same position to see if it is recognized to confirm the cause. ▶ Replace RFID tag.

8.6 Faults, possible causes and solutions (detection)

Malfunction	Possible cause	Solution
ELSD signal is low or disappears	Sample is too volatile	▶ Sample cannot be detected by ELSD due to its volatility.
	No or low ELSD carrier gas flow	▶ Verify there is gas supplied to the instrument. ▶ Check for leak in the gas lines. ▶ Verify that there is gas flow to the nebulizer from the ELSD sampling valve. ▶ Verify that there is gas flow to the ELSD sampling valve.
	Sample stuck on column	▶ Use stronger solvent or change column chemistry.
	ELSD not equilibrated long enough	▶ Restart run to re-stabilize and rezero ELSD baseline.
	Blocked nebulizer	▶ Sonicate nebulizer to clean or replace the nebulizer.
	Blocked ELSD line	▶ Trace the blockage and replace the blocked line.
	Rotor and/or stator in ELSD Sampling valve is worn, dirty, or clogged	▶ Replace the rotor and/or stator.
Poor ELSD Peak shape	Blocked nebulizer or nebulizer tubing	▶ Clean the nebulizer or replace the nebulizer tubing.
	Nebulizer tubing is not properly connected	▶ Reinstall the nebulizer tubing properly.

Malfunction	Possible cause	Solution
Noisy ELSD baseline	Dirty or contaminated gas	▶ Replace gas source. ▶ Replace filter.
	Gas is not dry/high humidity environment	▶ Use a dry air supply. ▶ Use nitrogen.
	Moisture trapped in the gas lines	▶ Remove moisture from lines by purging the air flow system with nitrogen for 5 minutes.
	Mobile phase is contaminated or contains non-volatile modifiers	▶ Use volatile modifiers in the mobile phase.
	Solvent contains non volatile stabilizers	▶ Use solvent with volatile modifiers.
	Dirty optics	▶ Clean the optics.
	Dirty drift tube	▶ Clean drift tube.
	Not correct installed exhaust	▶ Install the exhaust correctly. See Chapter 5.9 "Installing the exhaust (ELSD only)", page 28
	Electronics - Preamp not grounded properly	▶ Verify that preamp grounding cable is in place.
	Nebulizer is partially blocked	▶ Sonicate nebulizer to clean or replace.
	Silica or packing material leaked out of cartridge	▶ Replace the cartridge. ▶ Flush the system.
No UV signal	UV light burned out	▶ Replace the UV light.
Low UV signal	Dirty flow cell	▶ Clean the flow cell.

8.7 Error messages

Error message	Possible cause	Solution
Instrument Alarm: Solvent pump: Communication to the pump cannot be established.	Serial communication disturbed	▶ Restart the instrument.
Instrument Alarm: Solvent pump: Motor overloading.	-	▶ Contact BUCHI Customer Service.
Instrument Alarm: Solvent pump: Motor regulation error.	Hardware error solvent pump	▶ Contact BUCHI Customer Service.

Error message	Possible cause	Solution
Instrument Alarm: Solvent pump: Power supply error.	Hardware error solvent pump	▶ Contact BUCHI Customer Service.
Instrument Alarm: Solvent pump: Solvent pump motor fan is not working.	Hardware error fan solvent pump	▶ Contact BUCHI Customer Service.
Instrument Alarm: UV detector: Communication error occurred.	Serial communication disturbed	▶ Restart the instrument.
Instrument Alarm: UV detector: Bad block of High Voltage (HV) generator for lamp or disconnected lamp or bad lamp.	Lamp defect	▶ Check the lamp and restart instrument.
	No lamp	
	Hardware error UV detector	▶ Contact BUCHI Customer Service.
Instrument Alarm: UV detector: Bad power supply of lamp heater voltage.	Hardware error UV detector	▶ Contact BUCHI Customer Service.
Instrument Alarm: UV detector: Bad power supply of lamp anodic voltage.	Hardware error UV detector	▶ Contact BUCHI Customer Service.
Instrument Alarm: UV detector: Bad power supply of detector analog or digital voltage.	Hardware error UV detector	▶ Contact BUCHI Customer Service.
Instrument Alarm: UV detector: 4th cycle of lamp ignition fails.	Lamp defect	▶ Check the lamp and restart instrument.
Instrument Alarm: UV detector: Lamp spontaneously douse during unit working.	Lamp defect	▶ Check the lamp and restart instrument.

Error message	Possible cause	Solution
Instrument Alarm: UV detector: Lamp ignition fails after short douse in AUTOZERO function and repeated High Voltage impulse and heater cycle fails too.	Hardware error UV detector.	▶ Contact BUCHI Customer Service.
Instrument Alarm: UV detector: Bad identification of light peak caused by low light intensity.	Lamp defective/ Flow cell dirty	▶ Check the lamp and restart instrument.
Instrument Alarm: UV detector: Bad identification of light peak caused by unworkable light intensity.	Lamp defective/ Flow cell dirty	▶ Check the lamp and restart instrument.
Instrument Alarm: UV detector: Low light intensity was found on some photo elements of CCD sensor.	Hardware error UV detector	▶ Contact BUCHI Customer Service.
Instrument Alarm: UV detector: Spontaneously failure on analog or digital power supply.	Hardware error UV detector	▶ Contact BUCHI Customer Service.
Instrument Alarm: UV detector: Error or base offset of unit, bad CCD sensor, monochromator is open.	Hardware error UV detector	▶ Contact BUCHI Customer Service.
Instrument Alarm: UV detector: Secondary lamp is not working or lamp spontaneously douse.	2nd lamp defect	▶ Check the lamp and restart instrument.

Error message	Possible cause	Solution
Instrument Alarm: UV detector: Any fan is not working or any fan is disconnected or mechanical blocked.	Hardware error UV detector	▶ Contact BUCHI Customer Service.
Solvent List File	Solvent list file corrupted	▶ Shutdown the Pure software. ▶ Delete the solvent list. ▶ Restart the Pure software.
Solvent Lines File: Invalid program execution.	Solvent lines file corrupted	▶ Shutdown the Pure software. ▶ Delete the solvent list. ▶ Restart the Pure software.
Solvent Defaults File: The solvent information file and the default solvent information file are missing.	Software damaged	▶ Uninstall and reinstall software.
Using Default Solvent List: System defaults used instead of actual resource.	Solvent file has been deleted	▶ Restart the instrument.
Solvent Pressure: Pressure limit has been exceeded.	Blockage in the line	▶ Remove column. ▶ Replace with bypass. ▶ Determine if column is not the source of blockage. ▶ If not column is the source of blockage, then check all fluidic lines.
	Sample crashing/precipitate	▶ Purge lines/system with a strong or appropriate solvent that will dissolve the sample
	Valve stuck in incorrect position	▶ Reset valve position. ▶ Contact BUCHI Customer Service.

Error message	Possible cause	Solution
Solvent Pressure 2: Pressure limit has been exceeded.	Blockage in line after the ELSD sampling valve	▶ Check the fluidic lines and components downstream from the pressure sensor 2 (between the ELSD sampling valve and the fraction collector valve, waste line) for the source of blockage.
Error in solvent line calibration file.	Calibration file of solvent lines damaged	▶ Shutdown the Pure software. ▶ Delete the calibration list. ▶ Restart the Pure software.
Inlet Gas Pressure Out of Range - LOW PRESSURE	No gas or gas flow is low	▶ Check the gas lines in the system for leaks. ▶ Make sure gas source/tank is available.
	The pressure gauge is not set correctly	▶ Check pressure gauge setting to make sure that it is set to deliver 2.5 L/min gas flow (Inlet Pressure with Air State off around 85 - 115 psi).
Inlet Gas Pressure Out of Range - LOW PRESSURE (Before run starts)	Blockage in the system	▶ Check the gas lines in the system for blockages.
	The pressure gauge is not set correctly	▶ Check pressure gauge setting to make sure that it is set to deliver 2.5 L/min gas flow (Inlet Pressure with Air State off around 85 - 115 psi).
Inlet gas pressure out of range- HIGH (During run)	Blockage in the nebulizer or gas line to the nebulizer	▶ Check the nebulizer or tubing to the nebulizer for blockages ▶ Sonicate the nebulizer in a suitable solvent or replace nebulizer
Sensor pressure calibration file	Pressure sensor calibration file damaged.	▶ Shutdown the Pure software. ▶ Delete the pressure value list. ▶ Restart the Pure software.

Error message	Possible cause	Solution
Instrument Alarm: Vapor	Vapor sensor settings are set too sensitive	▶ Change the vapor limits to a lower sensitivity. See Chapter 6.2.9 "Editing the vapor sensor sensitivity", page 52
	Leaks	▶ Check for any leaks in the solvent flow paths.
	Solvent vapors in work area	▶ Solvent vapors in the work area may set on the alarm. Use the instrument in a hood or well ventilated area with no open solvents near the system.
Vapor sensor no signal	Vapor sensor is not connected or is defect	▶ Check the cable to the vapor sensor.
Instrument Alarm: Watchdog	Timing/communication issue in software	If in setup mode: ▶ Restart the instrument. ▶ If in run mode: ▶ Press reset. ▶ Restart after the run is finish.
Solvent Pressure	Solvent pressure limit has been exceeded	▶ Remove column. ▶ Replace with bypass. ▶ Determine if column is not the source of blockage. ▶ If not column is the source of blockage, then check all fluidic lines.

Error message	Possible cause	Solution
Fraction Collector	Arm is obstructed	▶ Check arm path to make sure there are no obstructions. ▶ Reset the Fraction Collector arm. See Chapter 8.8 "Resetting the Fraction collector arm", page 89
	Fraction collector arm did not home properly	▶ Tighten the motor coupler. ▶ Contact BUCHI Customer Service.
	Fraction collector arm motor is slipping	▶ Contact BUCHI Customer Service.
	Home position sensor is bad	▶ Contact BUCHI Customer Service.
	Fraction collector arm motor has no power	▶ Contact BUCHI Customer Service.
Mode Switching Valve Failure	The Mode Switching valve failed to switch.	▶ Press Reset button to stop the alarm. ▶ Contact BUCHI Customer Service.
Prep Injection Valve Failure	Prep Injection Valve failed to switch.	Only Flash mode runs can be performed. ▶ Press Reset button to stop the alarm. ▶ Contact BUCHI Customer Service.
Low Disk Space	The disk space on this unit is almost full.	▶ Back up and delete data. ▶ Contact BUCHI Customer Service.
Solvent Safety Sensor alert	More solvent required	▶ Add solvent to bottle.
	Solvent safety sensor was not calibrated	▶ Calibrate/zero the solvent safety sensor properly.
Waste Safety Sensor alert	Waste container is full	▶ Empty waste container.
	Waste safety sensor was not calibrated	▶ Calibrate/zero the solvent safety sensor properly.

8.8 Resetting the Fraction collector arm

Navigation path
➔ Tools ➔ Manual Control ➔ Fraction Collector Arm Reset

▶ Navigate to the *Fraction Collector Arm Reset* dialog according to the navigation path.

▶ Confirm the secure question.

⇨ The Fraction collector arm is resetted.

8.9 Replacing the shuttle valve rotor

Materials needed:

- Torx wrench T10
- Pure sampling valve kit

▶ Switch the ***On/Off*** master switch to Off.

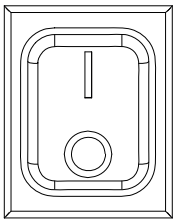

Precondition:

☑ Make sure that all tubings are marked for later installation.

▶ Remove all tubings.

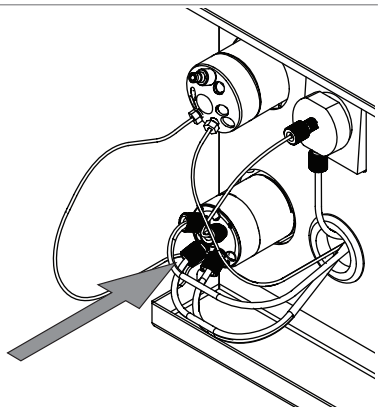

▶ Loosen the screws with the Torx wrench.

▶ Remove the valve head.

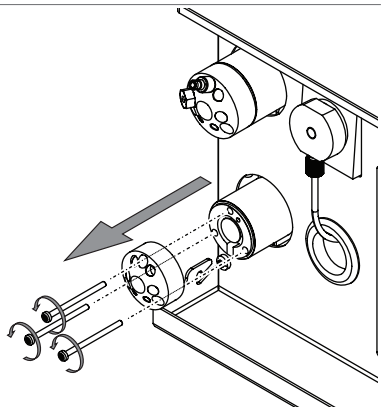

▶ Remove the valve rotor.

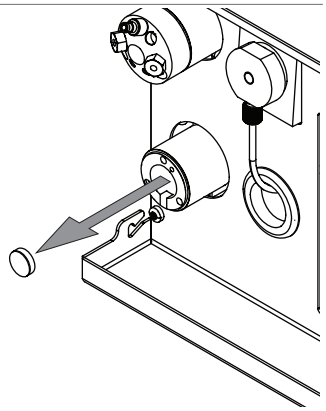

▶ Make sure that the holes in the new rotor and the pins inside the valve match.

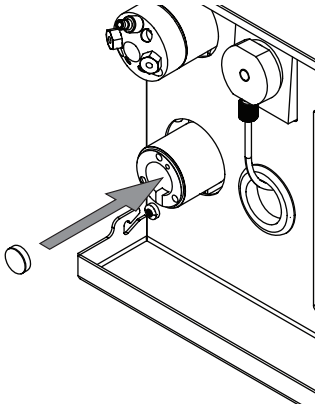

▶ Attache the valve head to the instrument with screws.

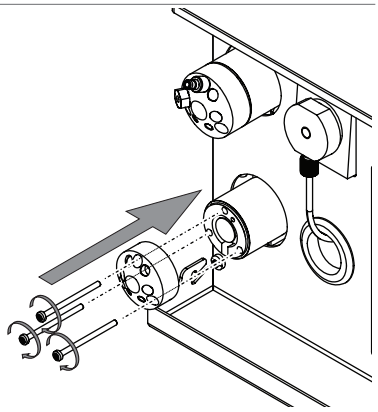

▶ Attach all tubings to the instrument.

9 Taking out of service and disposal

9.1 Taking out of service

- ▶ Switch off the instrument and disconnect it from the mains power supply.
- ▶ Remove all tubing and communication cables from the device.

9.2 Disposal

The operator is responsible for proper disposal of the instrument.

- ▶ When disposing of equipment observe the local regulations and statutory requirements regarding waste disposal.
- ▶ When disposing, observe the disposal regulations of the materials used. Materials used see Chapter 3.5 "Technical data", page 18

9.3 Returning the instrument

Before returning the instrument, contact the BÜCHI Labortechnik AG Service Department.
https://www.buchi.com/contact

10 Appendix

10.1 Spare parts and accessories

Use only genuine BUCHI consumables and spare parts in order to ensure correct, safe and reliable operation of the system.

NOTE

Any modifications of spare parts or assemblies are only allowed with the prior written permission of BUCHI.

10.1.1 Accessories

	Order no.	Image
Pure rack type 1 Rack for 12 x 75 mm glass tubes, 1 pc.	11066672	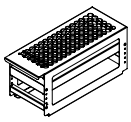
Pure rack type 2 Rack for 13 x 100 mm glass tubes, 1 pc.	11066673	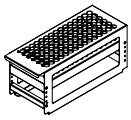
Pure rack type 3 Rack for 16 x 125 mm glass tubes, 1 pc.	11066674	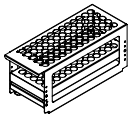
Pure rack type 4 Rack for 16 x 150 mm glass tubes, 1 pc.	11066675	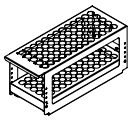
Pure rack type 5 Rack for 18 x 150 mm glass tubes, 1 pc.	11066676	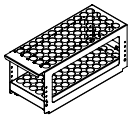
Pure rack type 6 Rack for 25 x 150 mm glass tubes, 1 pc.	11066677	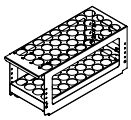
Pure rack type 7 Rack for 9 squared bottles of 480 mL, 1 pc.	11068452	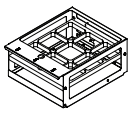
Pure rack type 8 (funnel rack) Rack for 6 funnels	11069407	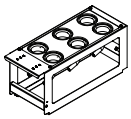
Pure rack type 9 Rack for 16 x 100 mm glass tubes, 1 pc.	11069242	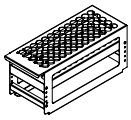

	Order no.	Image
Solvent bottle platform kit Solvent bottle platform on top of the instrument. For maximum 4 bottles (volume 4 L each)	11069285	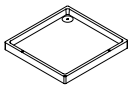
Retaining container Retaining container for solvent bottle platform for more safety regarding leaking	11068468	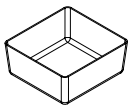
Pure Dry Air Supply unit	11069026	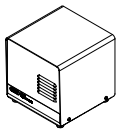
Loading Pump with flow rates from 2.5 to 250 mL/min, incl. tubing and fitting	11071418	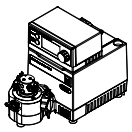
Pure cartridge holder XXL Cartridge holder for cartridges of 800 g to 5000 g	11070532	
Pure column holder XL Column holder for column diameters 50 to 70 mm	11068467	
Pure nebulizer set	11069464	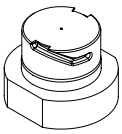

10.1.2 Sample introduction accessories

	Order no.
Pure Solid loader S set, incl. adapter set, sleeve, tubes (20 pcs.) and frits (40 pcs.)	11068975
Pure Solid loader M set, incl. adapter set, sleeve, tubes (20 pcs.) and frits (40 pcs.)	11070505
Pure Solid loader frits S (40 pcs.)	11068969
Pure Solid loader frits M (40 pcs.)	11069654
Pure Solid loader tubes S (20 pcs.)	11068971
Pure Solid loader tubes M (20 pcs.)	11069653
Pure Solid loader insertion rod S (1 pc.)	11068973
Pure Solid loader insertion rod M (1 pc.)	11070569
Pure sample loop 2 ml, 1 pc.	11068476
Pure sample loop 5 ml, 1 pc.	11068205
Pure sample loop 10 ml, 1 pc.	11068206

10.1.3 Spare parts

	Order no.	Image
Pure cartridge holder Cartridge holder for cartridges for 4 g to 330 g	11065940	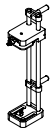
Pure column holder Column holder for columns diameters 10mm to 50mm	11066594	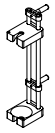
Injection valve UNF 1/4"-28	044867	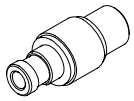
Pure transfer line ELSD	11069409	
Touch-screen stylus	11068360	
Sample injection stator	11069688	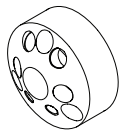

10.1.4 Tubes

	Order no.
Pure Glass Tubes 13 x 100 mm 1000 pcs.	148623414
Pure Glass Tubes 16 x 150 mm 1000 pcs.	148623416
Pure Glass Tubes 18 x 150 mm 500 pcs.	148623410
Pure Glass Tubes 25 x 150 mm 500 pcs.	148623411
Pure Squared bottles 480 mL 24 pcs.	148623412

10.1.5 Tools and adapter kits

	Order no.
Luer lock connection set Set of 2 luer lock adapters	11068242

	Order no.
Advanced adapter kit flash Tube cutter, Fittings (1/8", 1/16"), Tubing (pneumatic, FEP 1/8", FEP 1/16"), Luer Lock adapters, Pneumatic reduction, Fuses, Injection valve	11068361
Advanced adapter kit prep Wrenches, Fittings (1/8", 1/16"), One piece fitting, 1/16", Tubing (pneumatic, FEP 1/8", PEEK 1/16"), SS nut and ferrule, Reductions, Fuses	11068362
Advanced adapter kit flash/prep Tube cutter, Wrenches, Fittings (1/8", 1/16"), One piece fitting, 1/16", Tubing (pneumatic, FEP 1/8", FEP PEEK 1/16"), SS nut and ferrule, Reductions, Luer Lock adapters, Fuses, Injection valve	11068363
Pure solvent line kit Package with 4 solvent lines and 5 level sensing lines	11068215

10.1.6 Wear parts

	Order no.	Image
Pure air filter	11066049	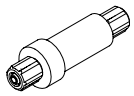
O-Ring for Pure nebulizer	11066421	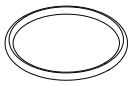
Pure nebulizer	11066423	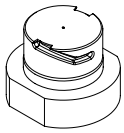
Pure UV flow cell 0.3 mm For all C-8xx	11068210	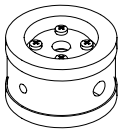
Pure UV flow cell 1.3 mm For all C-8xx, for enhanced sensitivity	11068214	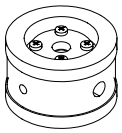
Shuttle valve rotor & head	11068229	
Hose SV-ELSD cpl.	11069457	
Pure Solid loader test 20 pcs	11069686	

10.2 Folder locations

Explanation	Type	Folder
Method files	.gfm	C:\Users\Public\Documents\Buchi\Pure \methods
Run files	.gkfr	C:\Users\Public\Documents\Buchi\Pure\runs

10.3 Finding out separation conditions with the navigator

10.3.1 Open the navigator

Navigation path

➔ Gradient panel

▶ Navigate to the *Gradient* panel according the navigation path.

▶ Tap the button *[Navigator]*.

⇨ The display shows the dialog *Navigator*.

10.3.2 TLC Silica

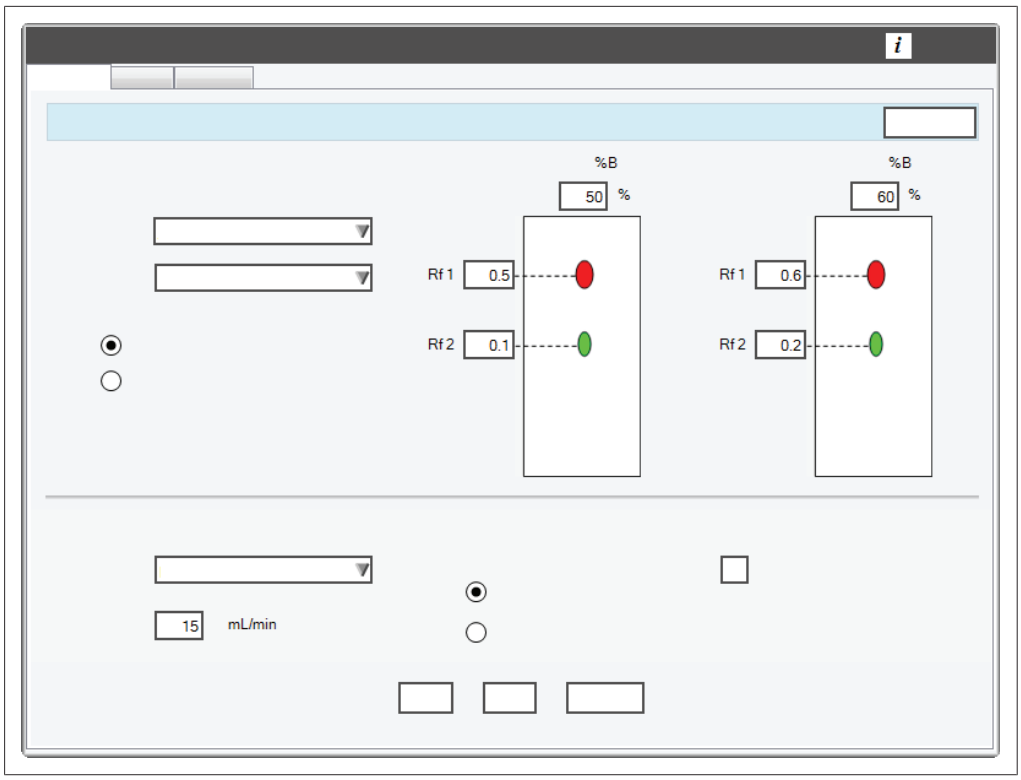

The TLC-Silica tool uses TLC separation data to provide a recommended gradient for silica separations of 2 or 3 components.
Specification of the samples needed:

- Two different solvent concentrations
- Two separations
- Silica TLC plates

Precondition:

☑ The display shows the dialog *Navigator*. See Chapter 10.3.1 "Open the navigator", page 97

▶ Select the *TLC- Silica* tab.

▶ Select the radio button for two or three components.

▶ Select the weaker solvent at drop-down list A.

▶ Select the stronger solvent at drop-down list B.

▶ Enter the solvent B concentrations used in the TLC separations.

▶ Measure the distance the spot moved on the silica TLC plates.
▶ Divide the measured value by the distance the solvent traveled.
⇨ This is your Rf- value.
▶ Enter the value in the Rf entry field.
▶ Select the column you wish to use from the drop-down list
⇨ The column is selected.
⇨ The display shows the default flow rate.
▶ Adjust the flow rate according to your needs.
▶ Select the radio button for Speed or Purity.
▶ Tap the button *[Calculate]*.
⇨ The display shows the results.
▶ Adjust the following values if necessary:

- Column
- Flow rate
- Speed / Purity

▶ Tap the button *[Accept]*.
⇨ The gradient is saved for a run.
⇨ The dialog box closes.

10.3.3 LC-C18

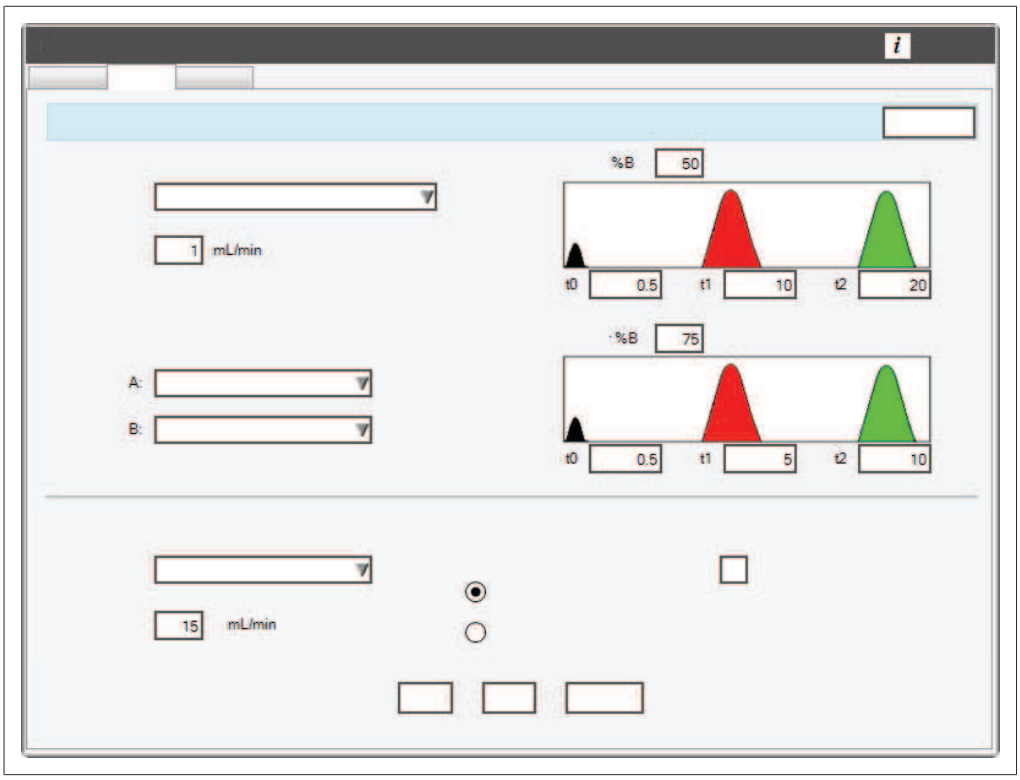

The LC-C18 Tool uses isocratic HPLC separation data to provide a recommended gradient for reversed phase separations of 2 components.

Specification of the samples needed:

- Two isocratic runs on a HPLC column
- Different mobile phase solvent concentrations
- Retention times (t1 and t2) of the components from the chromatograms.

Precondition:

☑ The display shows the dialog *Navigator*. See Chapter 10.3.1 "Open the navigator", page 97

▶ Select the *LC-C18* tab.
▶ Select the HPLC column used from the drop-down list.
▶ Select the weaker solvent at drop-down list A.
▶ Select the stronger solvent at drop-down list B.
▶ Enter the solvent concentrations used in the HPLC separations.
▶ Enter the retention times for each separation under each chromatograph.
▶ Select the column you wish to use from the drop-down list

⇨ The column is selected.

⇨ The display shows the default flow rate.

▶ Adjust the flow rate according to your needs.
▶ Select the radio button for Speed or Purity.
▶ Tap the button *[Calculate]*.

⇨ The display shows the results.

▶ Tap the button *[Accept]*.

⇨ The gradient is saved for a run.

⇨ The dialog box closes.

10.3.4 LC-Transfer

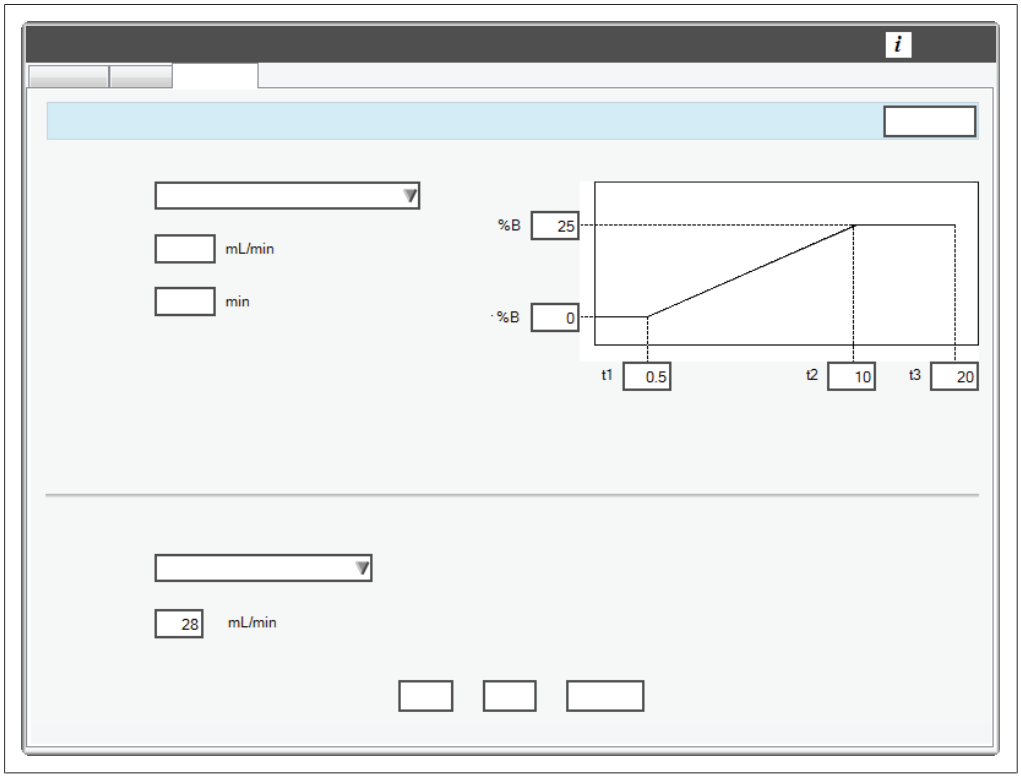

The LC-Transfer tool converts an HPLC gradient into a Flash Chromatography gradient.
Specification of the sample needed:

- One run on a HPLC column (in gradient elution mode)
- Times %B changes (t1, t2 and t3)

Precondition:

☑ The display shows the dialog *Navigator*. See Chapter 10.3.1 "Open the navigator", page 97

▶ Select the LC-Transfer tab.
▶ Select the HPLC column type used from the drop-down list.
▶ Enter the flow rate used in the HPLC separation.
▶ Enter the following HPLC gradient conditions:

- lower and higher %B
- times t1, t2 and t3

▶ Select the cartridge you wish to use for the Flash separation from the drop-down list.
⇨ The cartridge is selected.
⇨ The display shows the default flow rate.
▶ Adjust the flow rate according to your needs.
▶ Tap the button *[Calculate]*.
⇨ The display shows the results.
▶ Adjust the following values if necessary:

- Flow rate

▶ Tap the button *[Accept]*.
⇨ The gradient is saved for a run.
⇨ The dialog box closes.

BUCHI Affiliates:

Europe

Switzerland/Austria

BÜCHI Labortechnik AG
CH – 9230 Flawil
T +41 71 394 63 63
F +41 71 394 64 64
buchi@buchi.com
www.buchi.com

Benelux

BÜCHI Labortechnik GmbH
Branch Office Benelux
NL – 3342 GT Hendrik-Ido-Ambacht
T +31 78 684 94 29
F +31 78 684 94 30
benelux@buchi.com
www.buchi.com/bx-en

France

BUCHI Sarl
FR – 91140 Villebon-sur-Yvette
T +33 1 56 70 62 50
F +33 1 46 86 00 31
france@buchi.com
www.buchi.com/fr-fr

Germany

BÜCHI Labortechnik GmbH
DE – 45127 Essen
T +800 414 0 414 0 (Toll Free)
T +49 201 747 49 0
F +49 201 747 49 20
deutschland@buchi.com
www.buchi.com/de-de

Italy

BUCHI Italia s.r.l.
IT – 20010 Cornaredo (MI)
T +39 02 824 50 11
F +39 02 575 12 855
italia@buchi.com
www.buchi.com/it-it

Russia

BUCHI Russia/CIS
Russia 127287 Moscow
T +7 495 36 36 495
russia@buchi.com
www.buchi.com/ru-ru

Spain

BUCHI Ibérica S.L.U.
ES – 08960 Barcelona
T +34 936 06 8010
iberica@buchi.com
www.buchi.com/es-es

United Kingdom

BUCHI UK Ltd.
GB – Suffolk CB8 7SQ
T +44 161 633 1000
F +44 161 633 1007
uk@buchi.com
www.buchi.com/gb-en

NIR-Online

Germany

BÜCHI NIR-Online
DE – 69190 Walldorf
T +49 6227 73 26 60
F +49 6227 73 26 70
nir-online@buchi.com
www.nir-online.de

America

Brazil

BUCHI Brasil Ltda.
BR – Valinhos SP 13271-200
T +55 19 3849 1201
F +55 19 3849 2907
brasil@buchi.com
www.buchi.com/br-pt

USA/Canada

BUCHI Corporation
US – New Castle, DE 19720
T +1 877 692 8244 (Toll Free)
T +1 302 652 3000
F +1 302 652 8777
us-sales@buchi.com
www.buchi.com/us-en

Asia

China

BUCHI China
CN – 200233 Shanghai
T +86 21 6280 3366
F +86 21 5230 8821
china@buchi.com
www.buchi.com/cn-zh

India

BUCHI India Private Ltd.
IN – Mumbai 400 055
T +91 22 667 75400
F +91 22 667 18986
india@buchi.com
www.buchi.com/in-en

Indonesia

PT. BUCHI Indonesia
ID – Tangerang 15321
T +62 21 537 62 16
F +62 21 537 62 17
indonesia@buchi.com
www.buchi.com/id-in

Japan

Nihon BUCHI K.K.
JP – Tokyo 110-0008
T +81 3 3821 4777
F +81 3 3821 4555
nihon@buchi.com
www.buchi.com/jp-ja

Korea

BUCHI Korea Inc.
KR – Seoul 153-782
T +82 2 6718 7500
F +82 2 6718 7599
korea@buchi.com
www.buchi.com/kr-ko

Malaysia

BUCHI Malaysia Sdn. Bhd.
MY – 47301 Petaling Jaya, Selangor
T +60 3 7832 0310
F +60 3 7832 0309
malaysia@buchi.com
www.buchi.com/my-en

Singapore

BUCHI Singapore Pte. Ltd.
SG – Singapore 609919
T +65 6565 1175
F +65 6566 7047
singapore@buchi.com
www.buchi.com/sg-en

Thailand

BUCHI (Thailand) Ltd.
TH – Bangkok 10600
T +66 2 862 08 51
F +66 2 862 08 54
thailand@buchi.com
www.buchi.com/th-th

BUCHI Support Centers:

South East Asia

BUCHI (Thailand) Ltd.
TH-Bangkok 10600
T +66 2 862 08 51
F +66 2 862 08 54
bacc@buchi.com
www.buchi.com/th-th

Middle East

BÜCHI Labortechnik AG
UAE – Dubai
T +971 4 313 2860
F +971 4 313 2861
middleeast@buchi.com
www.buchi.com

Latin America

BUCHI Latinoamérica
S. de R.L. de C.V.
MX – Mexico City
T +52 55 9001 5386
latinoamerica@buchi.com
www.buchi.com/es-es

We are represented by more than 100 distribution partners worldwide.
Find your local representative at: www.buchi.com

Other ManualsLib Projects

www.manualslib.com

www.manualslib.de

www.manualslib.es

www.manualslib.fr

www.manualslib.nl

www.manualslib.mx

www.manualslib.tech 30+ Languages